75 cents

hr focus on communications technology . . .

ham radio magazine

NOVEMBER 1969

OPERATIONAL AMPLIFIERS...

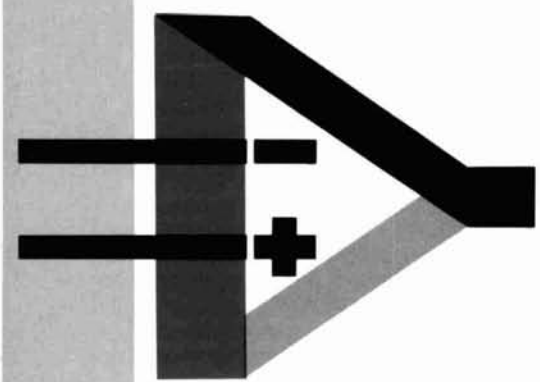

THEORY, SELECTION, & APPLICATION

this month

- wwv receiver 24
- multiband antenna 28
- electronic key 32
- six-meter collinear 59

Ham Radio at its best

312-B5

312-B4

516-F2

DL-1

S-Line Components and Collins Systems

Adding Collins S-Line components to a Collins system gives you ham radio at its best.

The 312B-4 Speaker Console lets you control your S-Line with the flip of a switch. Other features are directional watt meter and phone patch.

Make your KWM-2 fixed station more versatile with the 312B-5 VFO Console. Get all 312B-4 features, plus the capability of limited separation of transmitter and receiver frequencies.

Switch on the DL-1 Dummy Load and tune up; switch it off and operate. No need to unplug. Control the dummy antenna load with a front panel switch or remote control.

All the voltages required for the 32S-3 Transmitter or KWM-2 Transceiver are supplied by the 516F-2 AC Power Supply.

Fixed station, portable or mobile, Collins has a complete line of system components to put more enjoyment into ham radio. And all components, including the power supply, are styled with S-Line eye appeal.

COLLINS

For The Experimenter!

International EX Crystal & EX Kits

OSCILLATOR / RF MIXER / RF AMPLIFIER / POWER AMPLIFIER

Type EX Crystal

Available from 3,000 KHz to 60,000 KHz. Supplied only in HC 6/U holder. Calibration is ±.02% when operated in International OX circuit or its equivalent. (Specify frequency)

$3.95

OX OSCILLATOR

Crystal controlled transistor type.
Lo Kit 3,000 to 19,999 KHz
Hi Kit 20,000 to 60,000 KHz
(Specify when ordering)

$2.95

MXX-1 Transistor RF Mixer **$3.50**
A single tuned circuit intended for signal conversion in the 3 to 170 MHz range. Harmonics of the OX oscillator are used for injection in the 60 to 170 MHz range.
Lo Kit 3 to 20 MHz
Hi Kit 20 to 170 MHz
(Specify when ordering)

SAX-1 Transistor RF Amplifier **$3.50**
A small signal amplifier to drive MXX-1 mixer. Single tuned input and link output.
Lo Kit 3 to 20 MHz
Hi Kit 20 to 170 MHz
(Specify when ordering)

PAX-1 Transistor RF Power Amplifier **$3.75**
A single tuned output amplifier designed to follow the OX oscillator. Outputs up to 200 mw can be obtained depending on the frequency and voltage. Amplifier can be amplitude modulated for low power communication. Frequency range 3,000 to 30,000 KHz.

BAX-1 Broadband Amplifier **$3.75**
General purpose unit which may be used as a tuned or untuned amplifier in RF and audio applications 20 Hz to 150 MHz. Provides 6 to 30 db gain. Ideal for SWL, Experimenter or Amateur.

Write for complete catalog.

INTERNATIONAL

CRYSTAL MFG. CO., INC.

10 NO. LEE • OKLA. CITY, OKLA. 73102

the powerpacked one from NRCI...

NCX-1000 DESKTOP TRANSCEIVER

NRCI's compact new happening puts you on the air with *complete* SSB, CW, and AM coverage of the 80 through 10 meter bands. There's a lot in it for you, including built-in AC power supply and monitor speaker. Check these features, and you'll see this is the rig to stay with!

- 1000 Watts PEP on SSB, 1000 Watts CW, 500 Watts FSK, 500 Watts AM.
- All-solid-state except for driver and PA.
- Built-in RF speech clipper.
- Wide-range fast attack/slow decay AGC.
- Receive Vernier with separate on/off control.
- Suggested amateur net price, $995.

For complete (and impressive) specifications and details, write:

NATIONAL RADIO COMPANY, INC.

NRCI 37 Washington St., Melrose, Mass. 02176

© 1969, National Radio Company, Inc.

International Marketing through:
Ad Auriema, Inc., 85 Broad St., New York, N.Y. 10004

ham radio magazine

november 1969

volume 2, number 11

staff

editor
James R. Fisk, W1DTY

vhf editor
Nicholas D. Skeer, K1PSR

fm editor
J. Jay O'Brien, W6GDO

associate editors
A. Norman Into, Jr., W1CCZ
Alfred Wilson, W6NIF
James A. Harvey, WA6IAK

art director
Jean Frey

publisher
T. H. Tenney, Jr. W1NLB

offices

Greenville, New Hampshire 03048
Telephone: 603-878-1441

ham radio magazine is published monthly by Communications Technology, Inc., Greenville, New Hampshire 03048. Subscription rates, world wide: one year, $6.00, three years, $12.00. Second class postage paid at Greenville, N.H. 03048 and at additional mailing offices.

Copyright 1969 © by Communications Technology, Inc. Title registered at U. S. Patent Office. Printed by Capital City Press, Inc. in Montpelier, Vermont 05602, U.S.A.

Microfilm copies of current and back issues are available from University Microfilms, 313 N. First Street, Ann Arbor, Michigan 48103.

Postmaster: Please send form 3579 to **ham radio** magazine, Greenville, New Hampshire 03048.

contents

6 **operational amplifiers**
Donald W. Nelson, WB2EGZ

24 **solid-state wwv receiver**
Henry D. Olson, W6GXN

28 **multiband long-wire antenna**
Edward M. Noll, W3FQJ

32 **electronic keyer**
G. D. Young, VE7BFK

42 **antennas and capture area**
James R. Kennedy, K6MIO

48 **improving the HT-37**
Milton L. Pokress, W3CM

52 **simple microwave antenna**
Richard B. Kolbly, K6HIJ

54 **vhf signal generator**
Vernon A. Fitzpatrick, WA8OIK

59 **six-meter collinear array**
John O. Stanley, K4ERO

62 **tuning up ssb transmitters**
Larry Allen

departments

4 a second look
96 advertisers index
81 flea market
68 ham notebook
62 repair bench

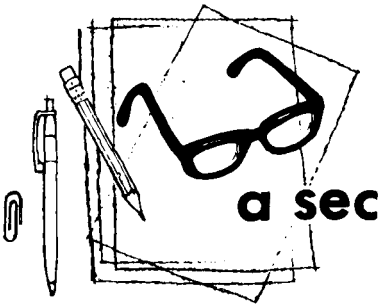

a second look

by jim fisk

Spring and early summer seems to be the traditional time to install a new antenna (for most sensible people—I always seem to wait until winter's first real blizzard). Magazines often feature antenna articles in the spring, and it's great to get outside and try out new ideas. In the fall, the new antenna is given a final inspection and maintenance is performed to ensure that it will withstand the rigors of coming winter storms.

Regardless of when you work on an antenna installation, a very real physical risk is involved. When you climb a tower or a steeply pitched roof, one incautious moment can end in tragedy. With winter just around the corner, many amateurs will be thinking about winterizing their antennas. I'd like to offer a word of advice: observe safety rules and use the buddy system, even though you may have to climb only fifteen feet.

Here's a true story about a ham in California who was making antenna adjustments alone. The guiding forces that protect drunks and other foolish creatures must have been operating in this instance, because this fellow lucked out. Others may not be as fortunate.

Bill G. (not his real name, of course) decided to work on his antenna one afternoon. Coaxial cable needed replacing and some soldering was necessary. Bill started up a ladder laden with 70 feet of coax and a 50-foot extension cord looped around one shoulder. Over this was looped a leather holster full of tools. A bag of hardware was tied to the bottom of the tool holster. Bill climbed over the end of the ladder and started up the steep roof. No problem here: he'd done this many times before. But he didn't account for one important factor. A typical Southern California breeze, about 15 knots, was blowing in from the ocean.

When Bill reached the base of the antenna mast, he was standing on the peak of the roof, which offered very little footing. You can probably guess what happened next. The weight of gear and tools on one side of his body, plus the wind forces, caused him to lose his balance. Friend Bill, tools, cable, and hardware started down the roof toward the ground 30 feet below. Somehow the coax cable wrapped itself around one of the standpipes on the roof, and Bill ended up dangling over the edge of the eves. Thanks to the strength of the cable and short overhang of the eaves, Bill managed to reach the ground by going down the side of the house rappel fashion. (Antenna work was suspended for the rest of the day.)

It is easy to overlook safety precautions when you're preoccupied with the problem at hand, when you're in a hurry, or if you're tired. Climbing a tower or roof should never be attempted without another person standing by to give aid or summon help. Professional tv antenna installers, for example, never work alone. Insurance companies and common sense forbid it.

Overconfidence when working on high structures is probably the greatest cause of accidents. Our California friend had been on his roof many times during the weeks preceding the accident. He felt almost as much at home working on his roof as in his workshop. The first time up, he took every possible precaution. But as he became familiar with the situation, he became careless. Result: near disaster.

The consequences of a 30-foot fall can be just as permanent as a jolt from a 3-kV power supply. When you work on your antenna this fall, remember the tale about our colleague who almost ended up a statistic. Be careful, and use the buddy system.

Jim Fisk, W1DTY
editor

Now SEE the HQ-215 Mk-II

The Hammarlund HQ-215

The solid state receiver for those who want to be one-up

New Radio — New Price

At your distributor now

The Hammarlund HQ-215 brings to amateur radio a fully transistorized receiver offering a new high in sensitivity, selectivity and drift-free operation. Revolutionary unitized I-beam construction coupled with modularized design provides an unusually high degree of electrical and mechanical stability. A unique carousel dial with 22" of frequency calibrations means easy reading and resetability to within 200 cycles. And the [illegible] operation gives you [illegible] peak operating [illegible]. Here are the facts:

FREQUENCY COVERAGE: Complete ham band coverage, 80-15 meters; 28.5 — 28.7 mcs on 10 meters. Provision for 13 optional crystals providing 200 kc segments from 3.4 — 30.2 mcs built in.

FREQUENCY READOUT: Visual dial accuracy is ±200 cycles on all bands.

FREQUENCY STABILITY: Less than 500 cycles per hour.

I-beam construction for strength

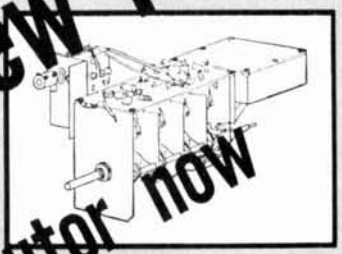

Modularized for electrical stability

TRANSISTORS: 26 transistors, 13 diodes and Zener regulator diodes.

SELECTABLE FILTERS: 2.1 kc mechanical filter supplied. Plug-in space for two optional filters. Any filter may be switch-selected from front panel.

MODE: Selectable USB, LSB, CW, OR AM.

SERVICE: SSB, CW, AM, and RTTY.

SENSITIVITY: Better than 0.5 microvolt for 10db signal-to-noise ratio.

SELECTIVITY: SSB-2.1 kc mechanical filter, 2:1 shape factor.

DIMENSIONS: Size: 6.8" H x 15.8" W x 14" D.

WEIGHT: 21 lbs.

$399.99
S215 Matching Speaker
$24.95
Suggested User Net

Established 1910

The **HAMMARLUND**
Manufacturing Company Incorporated
A subsidiary of Electronic Assistance Corporation
73-88 Hammarlund Drive, Mars Hill, North Carolina 28754

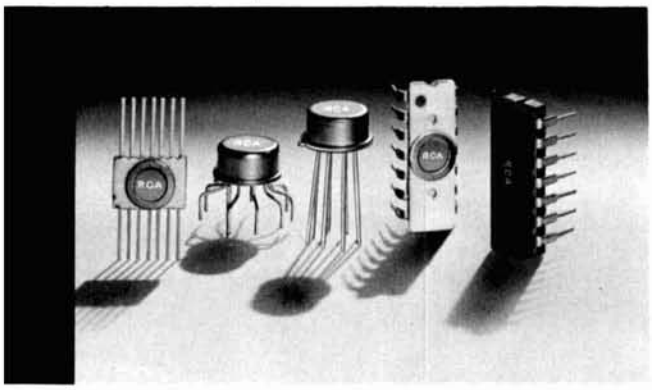

photo courtesy RCA

what's this we hear about op amps?

The operational amplifier has invaded amateur radio—here are the basic facts on its theory, selection and application

Don Nelson, WB2EGZ, 9 Green Ridge Road, Ashland, New Jersey 08034

If you have been keeping up with the current electronics literature, you've surely seen articles on the integrated circuit operational amplifier. Perhaps you've wondered just what it is and what it can do for you. The fact is, it can do just about anything you wish, and do it better than conventional circuits.

Tube versions of the op amp have been around for a long time. They were originally used in analog computers to perform mathematical operations such as addition, subtraction, and averaging. The main objection to these circuits was their huge physical size. Recent advances in solid-state technology have produced op amps, at very reasonable cost, with active elements formed on a single chip of silicon. A complete amplifier now occupies less space than many of the discrete components used in the original tube circuits.

The IC op amp is so useful in amateur radio applications that I've prepared this article to acquaint you with it. The first part of the article discusses some of the more popular circuits and gives the equations describing the relationship between input and

output. Then comes a description of the op amp's gain characteristics. The last part of the article is devoted to some applications you'll find useful around the amateur station.

typical circuit

The input stage of the op amp is a high-impedance differential voltage amplifier. This is followed by other voltage amplifiers. The output stage is a low-impedance power amplifier.

Fig. 1 shows a typical circuit. Resistor R_f feeds the output to the negative input, which is sometimes called the summing junction. The negative input is isolated from the driving signal, E_i, by resistor R_i, which represents the circuit's input resistance. The negative input is 180 degrees out of phase with the output and is at ground potential. Under these conditions, no current flows into the amplifier, because the current in R_f and R_i is equal and opposite. Ohm's law says that the output voltage, E_o, is related to the input voltage, E_i, in the same proportion as the values of R_f and R_i. The negative sign in the equation of **fig. 1** means that the phase has shifted 180 degrees.

fig. 1. Typical operational amplifier circuit, A, and block diagram of its three stages, B. Many arrangements of feedback elements are possible.

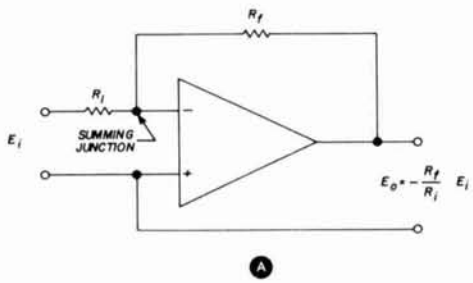

A

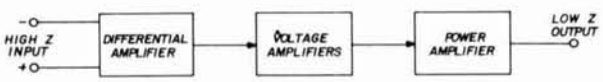

B

definitive examples

The following op amp circuits are ideal representations. Nothing is perfect, of course, but I've used examples of a perfect amplifier to provide definitive examples. A perfect amplifier would have these characteristics:

1. Infinite open-loop gain.
2. Infinite input impedance and zero output impedance.
3. Zero response time (the output changes simultaneously with changes in input).
4. Zero offset. With no voltage between the input terminals, the output voltage will be zero.

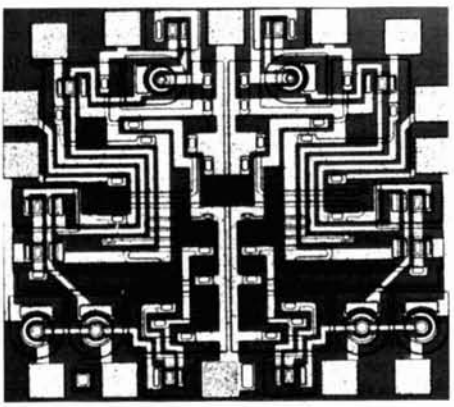

photo courtesy Motorola

The integrated-circuit chip used in the Motorola MC1535 dual operational amplifier.

The important things to remember about these characteristics, which are called summing junction restraints, are:

1. No current flows at either positive or negative input.
2. Both inputs are at the **same** potential.

open-loop operation

No feedback is used in the circuit of **fig. 2A.** The amplifier is running wide open. If the input is other than zero, the amplifier will be driven into saturation. It isn't often

used in the open-loop mode because of practical considerations. One use, however, is in a voltage comparator circuit. If two ac voltages are applied to the input, the open-loop amplifier will follow their potential difference. As the voltage on the positive terminal changes from that on the negative terminal and vice versa, the amplifier will swing as far as its supply will allow.

fig. 2. Three common op amp circuits. An open-loop circuit is shown in A, useful as a voltage comparator. B and C are inverting and non-inverting amplifiers.

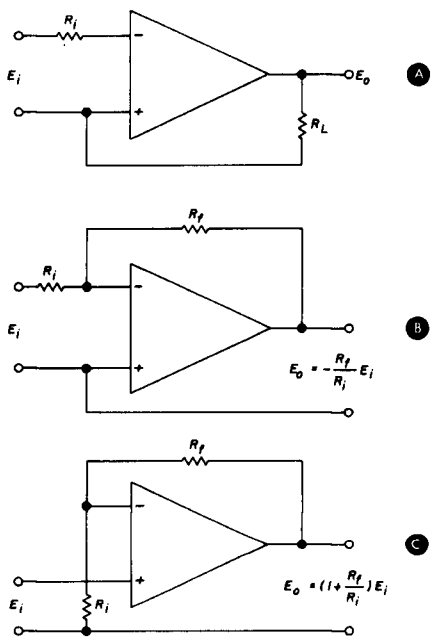

inverting and noninverting amplifiers

Two widely used arrangements of the op amp are illustrated in **figs. 2B** and **2C.** In the circuit of **fig. 2B** (which is the same as that of **fig. 1**), the output signal is inverted with respect to the input. If a square wave, for example, with positive-going pulses is applied to the input, the output pulses will be negative. Gain will be proportional to R_f and R_i. The sign in the right-hand member of the transfer function (relationship of input to output) will be negative because of the 180-degree phase reversal.

In the noninverting circuit of **fig. 2C**, input and output are in phase, which accounts for the plus sign in the equation.

voltage follower

A variation of the noninverting amplifier, the voltage follower, is shown in **fig. 3A.** Note that the output is connected to the negative input. The positive input is driven directly by the input signal, E_i. Output is equal to input: a unity-gain amplifier. This circuit is used for following voltage references. The limitations of the cathode follower (or emitter follower in transistor circuits) are minimized.

transducer, adder, subtractor

The circuit of **fig. 3B** is a current-to-voltage transducer. It can be used to drive a meter, recorder, or other voltage-operated indicating instrument from limited current sources.

Voltage inputs are added directly in the summing amplifier of **fig. 3C.** The op amp is shown here in one of the operations for which it was originally used. Each input may be weighted by using different resistor values. Input weighting is proportional to the gain of the particular input: E_1 will have a weight of 2 if $R_f = 2k$ and $R_1 = 1k$. If $R_2 = 500$ ohms, E_2 will have a weight of 4.

The circuit of **fig. 3D** is sometimes called a balanced input amplifier or symmetrical subtractor (difference amplifier). It's used when neither side of the signal being amplified is at ground potential, as across a current-sensing resistor. Other inputs may be added where inputs to the negative terminal are additive, and those to the positive terminal are subtractive.

integrator and differentiator

By using a capacitor in the feedback loop (**fig. 4A**), the op amp may be used to integrate voltage waveforms. When the capacitor is in the input, **fig. 4B**, the signal is differentiated. Both differentiator and integrator, as shown, are purely theoretical.

practical limitations

Most errors in a practical amplifier with known characteristics can be calculated. If

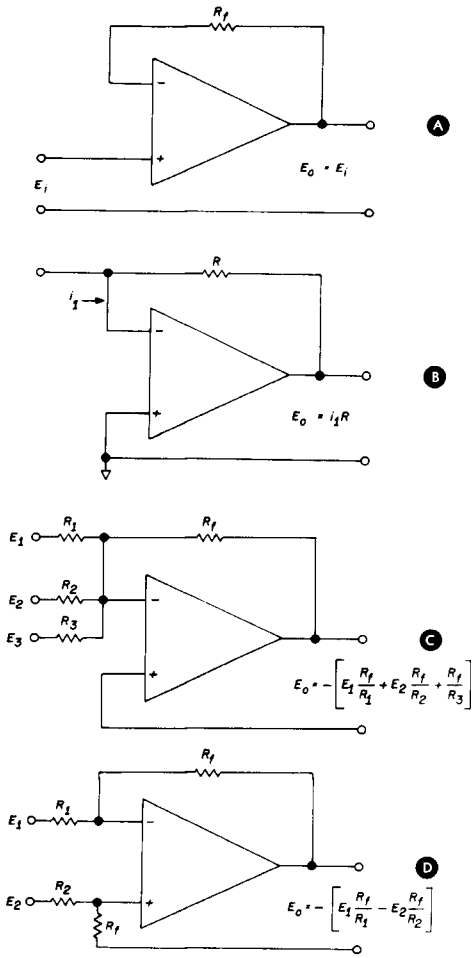

fig. 3. Other examples of op amp voltage amplifiers. A voltage follower is shown in A; current-to-voltage transducer, summing amplifier, and difference amplifier are shown in B, C and D.

the amplifier is properly chosen for a particular application, these errors may be negligible or can be compensated. With an understanding of amplifier gain, frequency response, and phase shift, you'll be able to apply compensation methods to tame the op amp of your choosing.

gain

Several definitions of gain must be understood:

1. **Open-loop gain.** This is the ratio of output-to-input voltage at any frequency. No feed-back is used. Typical open-loop gains are from 10^4 to 10^9 in commercially available amplifiers.
2. **Closed-loop gain.** When feedback is used, the amplification is called closed-loop gain. For reasons to be discussed, closed-loop gain is rarely less then unity.
3. **Loop gain.** This is the difference between open and closed-loop gain. Usually, errors are minimized with greater loop gain.

Characteristics such as gain attenuation with frequency (also called roll-off) and phase shift, which are common to all amplifiers, are especially important when considering operational amplifiers. As mentioned previously, phase shift through the amplifier must be 180 degrees when feedback is employed. Any additional phase shift must be compensated, or the circuit will oscillate.

In fig. 5, gain-bandwidth characteristics are shown for an uncompensated amplifier (not necessarily typical). The phase shift (lag) increases as the gain is affected by feedback. The amplifier becomes unstable when the roll-off exceeds 18 dB/octave because of the 180-degree phase lag. In well-designed amplifiers, this limit occurs below unity gain. Even with compensation, the

fig. 4. Voltage waveform integration and differentiation may be performed by A and B. These circuits are used for precise filtering.

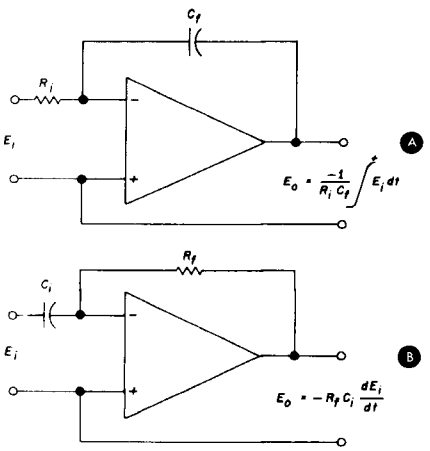

amplifier can't be controlled when 18 dB/octave is reached; therefore, operating below unity gain is usually impractical. Some amplifiers may be difficult to control at gains slightly above unity.

Output limiting is another popular form of compensation (**fig. 8**). Amplifiers such as the Fairchild μA709 have a special terminal just for this purpose (**fig. 8A**). The technique of **fig. 8B** is also useful. Output compensation frequently is used to supplement some form of input compensation such as that suggested in **fig. 8A.** While every compensation problem is unique, we may generalize and say that the compensations shown above are required by the peculiarities of integrated circuits.

fig. 5. Gain-bandwidth characteristics of uncompensated amplifier. Instability occurs as gain attenuation exceeds 18 dB/octave because of 180° phase lag.

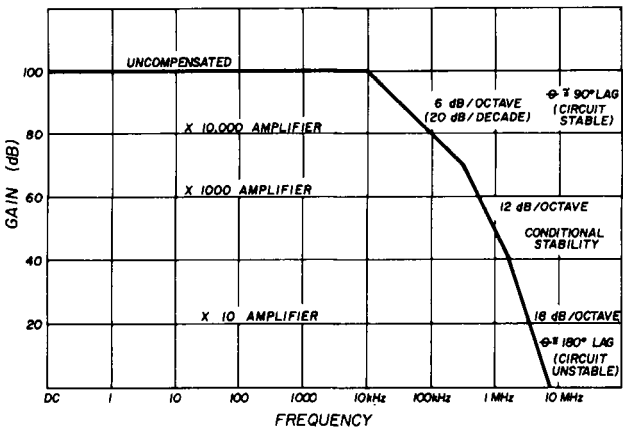

compensation

Amplifier compensation will limit frequency response, but roll-off and phase shift will be controlled. A plot of a compensated amplifier's response is shown in **fig. 6.** This type of presentation is called a Bode plot; it illustrates the limited gain roll-off (rate of closure with the unity-gain point in the frequency response of the amplifier).

Most op amp data sheets give enough information to make a Bode plot. This will allow you to analyze the results of intended compensation. The Bode plot is the easiest way of showing the characteristics of compensation.

The simplest way to stabilize an amplifier in which a large amount of feedback is used is to bypass some signal point in the circuit. IC op amps such as the RCA CA3047 and Fairchild μA702 have terminals specifically provided for this. **Fig. 7** shows an example. If the bypass capacitors (**fig. 7A**) are increased in value, the amplifier open-loop response will shift to the left (**fig. 7B**).

As the Bode plot shows, the high-gain, high-frequency characteristics are very limited with this configuration. The simple addition of a series resistor with the bypass capacitor will yield greater bandwidth.

Amplifiers using discrete components are internally compensated to a degree. With discretes, the main compensation is for output loading, C_L, stray wiring capacitance,

fig. 6. Bode plot of compensated amplifier. Response is limited so that 180° phase shift occurs before unity gain is reached.

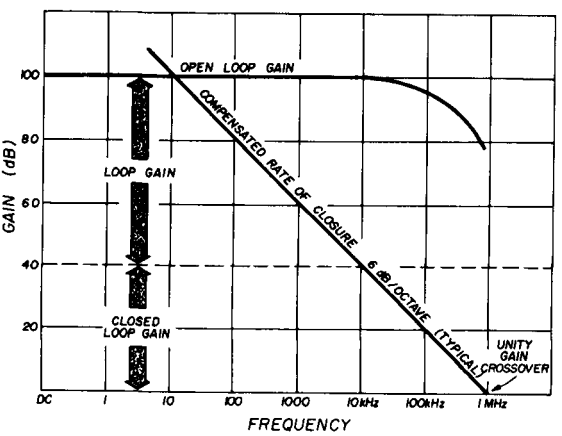

and input loading, C_i. Compensation techniques are shown in **fig. 9.** This is by no means the last word in compensation; it's only intended to help you when some published circuit won't work.

offset error

Among the imperfections of a practical op amp is the mismatch of components that prevents the amplifier from having exactly zero output with zero input. This may well be the most serious problem you'll encounter in dc operation of a high-gain amplifier. The basic compensation methods are shown in **fig. 10.**

input/output limitations

Input impedance and voltage swing generally may be neglected in the conventional inverting amplifier shown in **fig. 10.** The input impedance will be equal to the input resistor, R_i, because the input is a virtual ground. The amount of drift may be considered a limitation of input. The simplest compensation for this is shown in **fig. 10B,** where a resistor is used in the positive input.

Drift may be compensated similarly in a noninverting amplifier as shown in **fig. 11.** The difference here is that R_c is now the input resistor. In this circuit, the input voltage swing is a limitation. This is called "common-mode voltage swing" on the data sheet.

Output impedance, being some value greater than zero, will introduce small circuit errors. It is desirable to keep Z_{out} low.

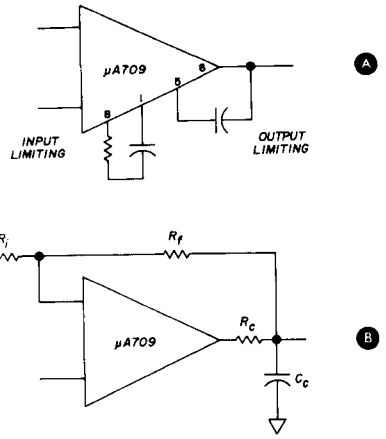

fig. 8. Response limiting at amplifier output. Capacitive compensation, A, or the RC network in B are frequently used to supplement input compensation.

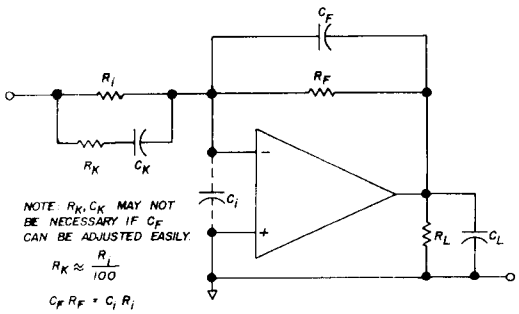

fig. 9. Compensation for op amps with discrete components. Input loading, stray wiring capacitance, and output loading must be compensated.

fig. 7. Compensating by bypassing. As capacitor values increase, A, amplifier open-loop response moves to the left, B.

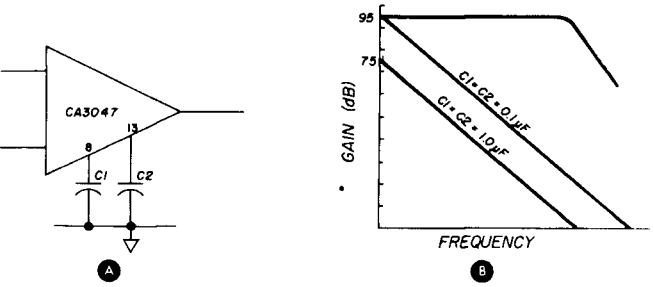

This may be done by using the greatest loop gain possible. A booster amplifier also reduces Z_{out} although such an addition probably wouldn't be considered unless the output current capability is too small. The most common current booster is the pass transistor in a precision power supply as suggested in **fig. 12.**

Beware of the limitation of output voltage swing, especially in IC amplifiers. This is a luxury that closely relates to the price of the op amp. The 30 V p-p capability of RCA's CA3047A is high for an IC. In a discrete-component amplifier such as Fairchild's A00-7, the output capability zooms to 200

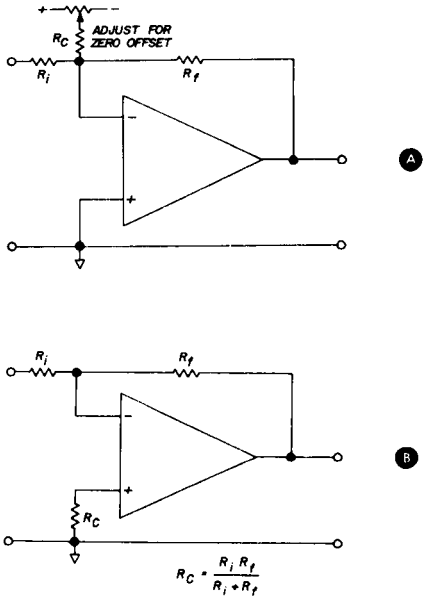

fig. 10. Compensation for dc offset error in an inverting amplifier. Adjustable current offset compensation is shown in A; drift-compensating resistor in B.

V p-p. Unfortunately, the price increases by 40 times.

One input error that's elusive—at least to me—is the common-mode error. Variously defined, this error arises from the effect of a change in one input on the signal fed to the other input. Common-mode error is smallest when the common-mode rejection ratio is high. This error is important when differential inputs are used, or when the amplifier is operated in the noninverting mode.*

selection hints

Always look for the least-expensive amplifier that will satisfy your requirements.

*Slewing rate is another limitation of practical op amps. Briefly, it is the maximum rate of change of output voltage with time. It must be considered when pulses of fast rise time are employed. It also is a limitation to using operational amplifiers at high frequencies. A thorough treatment of this parameter would be quite lengthy; however, a careful examination of the Bode plot will show how slewing rate will change with compensation. Interested readers will find a discussion related to an integrated-circuit op amp (MC-1530) in the Motorola *Integrated Circuit Handbook*, 1968 edition, p. 10-74. **Editor**

Some suggestions to guide the newcomer are outlined below.

1. High loop gain is desirable. Usually this implies the need for high open-loop gain.
2. Sufficient output voltage swing and output current to the load must be considered.
3. Offset voltage and drift must be checked for compatibility with your circuit.
4. Offset current is particularly important in circuits such as the current-to-voltage converter.
5. Common-mode voltage is important for noninverting and dual-input circuits.
6. Power-supply ripple, drift, and regulation are most important when the supply is used as a reference. However, all op amps work better with a high-quality supply.

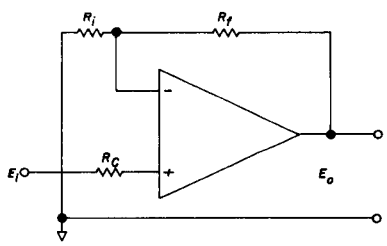

fig. 11. Drift compensation in a non-inverting amplifier. Input voltage swing is a limitation; Rc is now the input resistor.

The best over-all performance in op amps is obtained from those using discrete components—in fact, tube types. The least expensive and most interesting to experimenters are the integrated-circuit op amps. Despite their low cost, performance is quite good.

construction and layout

If you understand the parts of this article dealing with the ideal operational amplifier and the limitations of practical circuits, you're almost ready to warm up the solder-

ing iron. First, however, I'd like to give a few precautions on layout and choice of components.

capacitors and bypassing

Poor layout in an op amp circuit may cause its response to peak at the higher frequencies. Under certain conditions, oscillation will result. The problem can exist even with a neat layout. In stubborn cases, peaking may be cured with a mica bypass capacitor (try 100 pF) directly at the noninverting input. This is appropriate only for an inverting amplifier. The problem is rare when the amplifier is used in the noninverting mode.

More frequently, oscillation results from improper bypassing in the power supplies. A 0.1-μF capacitor on each power-supply lead at the amplifier socket is good practice. Low-inductance, laminated ceramic capacitors are perfect for this.

Capacitors can be critical in some circuits where low leakage is important. Dura-mica types are excellent for compensation purposes. High values and higher precision,

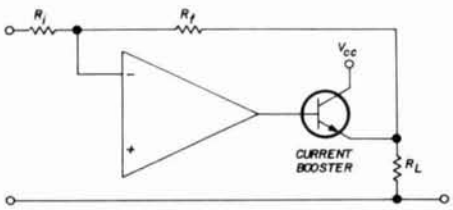

fig. 12. Increasing current output. If output current capability is too low, a booster amplifier can be used to reduce output impedance.

such as would be required for timing circuits, will call for Mylar or Polystyrene capacitors.

resistors and diodes

The giant called **loop gain,** which is restrained by an operational system, will create problems when noise and unwanted reactances exist. Therefore, certain precautions must be observed with respect to other circuit components.

Resistors must be chosen with care in systems where accuracy depends on the resistor. Wirewound resistors have low noise and excellent stability. However, they have the largest shunt capacitance and series inductance of all types. Also they're not usually available in values above one megohm, and they're expensive.

Carbon composition resistors shouldn't be

Photomicrograph of the RCA CA3033 operational amplifier. The CA3033 is the dual-in-line ceramic package version of the CA3047.

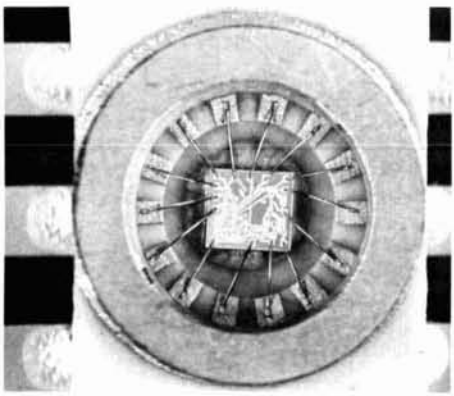

photo courtesy RCA

used where high stability is required, such as in the input and feedback circuits. Although they produce noise, these resistors are inexpensive and are satisfactory in less critical parts of the circuit.

Metal film resistors have excellent characteristics and provide a good compromise between the wirewound and composition types. Their upper range is ten megohms. Higher resistance values are available from Victoreen and Pyrofilm in the form of glass-enclosed, deposited-carbon construction. While there's little choice in precision resistors above ten megohms, you should be aware that some high-resistance types are voltage sensitive. They're not precise at voltages other than their test voltage—usually 10 V. Be careful not to get dirt or perspiration on these, as it may reduce their resistance.

Clamping diodes are frequently used in op amp circuits. Low-leakage, low-capacitance diodes such as the 1N914 should be used. **Never** use germanium diodes!

triple grounds

Three grounds should be used: **signal ground, power-supply ground,** and **chassis ground.** This triple grounding technique is essential to minimize voltage drops that would create system errors. At some point, all grounds may be connected, but not necessarily. Consider each system with respect to the voltage drops that will develop. For example, with high output current (load current), the load return to power supply ground must be direct. The reference signal, using signal ground, must not be transmitted through the same wire. **Fig. 13** illustrates some basic grounding techniques; however, the subtleties of the ground loop aren't always easily controlled. A little experimentation with the preceding concepts in mind could lead to a better solution.

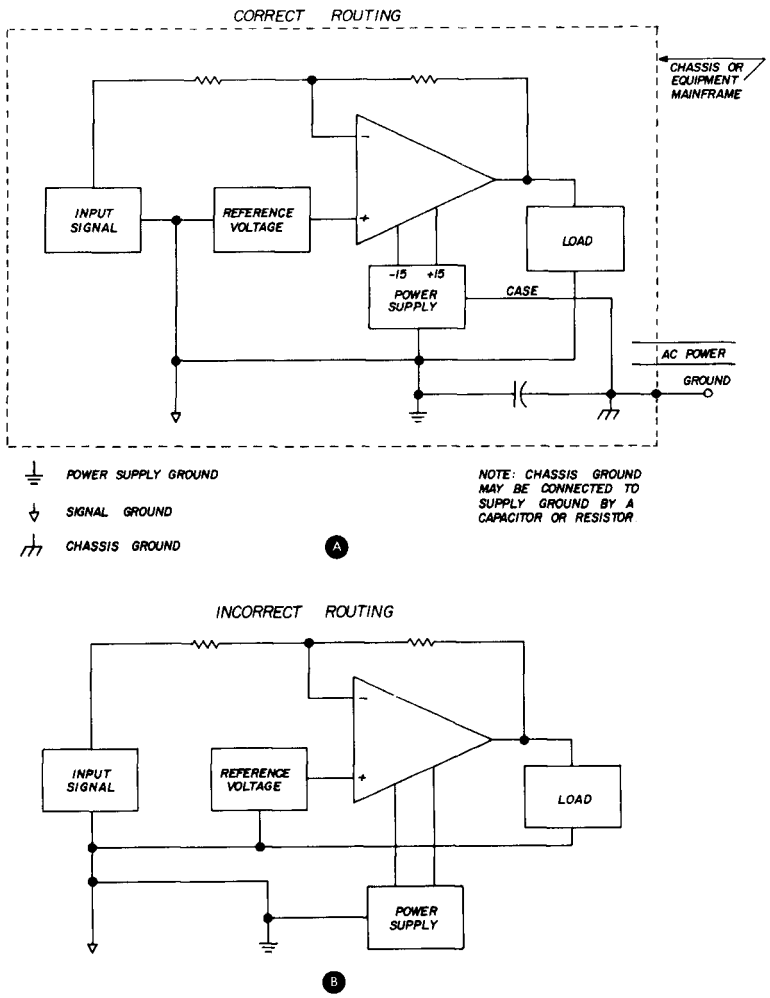

fig. 13. Correct routing, A, and incorrect routing, B, of load return in an op amp layout. Incorrect routing will cause an error in reference voltage.

a compendium of op amp circuits

I've devoted the remainder of this article to a description of some of the more common applications of the operational amplifier.

These circuits are just a starting point. I'm sure that ham ingenuity will result in many more interesting variations. Who knows? Perhaps someone will adapt one of these circuits to a communications problem and revolutionize the industry. In any event, I hope these ideas will inspire more experimentation. If you come up with a new use for the op amp, the market is wide open for your ideas.

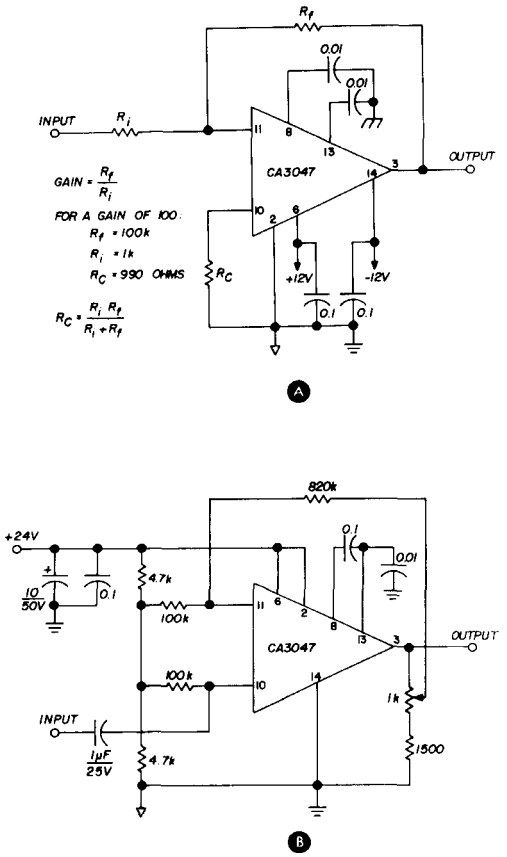

fig. 14. Complete circuits for the basic inverting amplifier, A, and non-inverting amplifier, B. Gain of noninverting circuit is approximately 10.

basic computer circuits

While basic computing circuits may not be your idea of a construction project, such applications of the op amp serve to identify what follows. As a matter of fact, with a little thought and planning, these circuits might be just the thing for a science fair presentation.

To recap, the basic inverting and noninverting op amps are shown in **fig. 14** with all the component values. You'll recall that the inverting amplifier shifts the phase of the input signal 180 degrees; that is, a positive-going input produces a negative-going output. The output signal will be in phase with the input in the noninverting amplifier.

Typical compensation is shown in the circuits of **fig. 14.** The following circuits are simplified. Compensation and proper bypassing are essential, of course. The RCA CA3047 is inexpensive and altogether adequate for the applications shown.

An adder is shown in **fig. 15.** The offset network is typical for all computing circuits. An alternate would be a voltage offset circuit, which is usually connected to the positive input. The currents from these three inputs are summed, and the negative of this sum appears at the output. Feedback at the negative input means that the input is a virtual ground, so the three inputs are effectively isolated, and no interaction exists between them.

An adder-subtractor circuit is shown in **fig. 16.** Note the equation of the circuit: the output voltage equals the sum of the noninverting inputs minus those on the inverting inputs. Thus, we have a subtracting circuit. By making the two resistors in the feedback circuit larger, greater-than-unity gain may be obtained.

If we change resistor values, a **weighted** adder results, as shown in **fig. 17.** the feedback

fig. 15. Typical adder. Offset compensation is similar for all computing circuits.

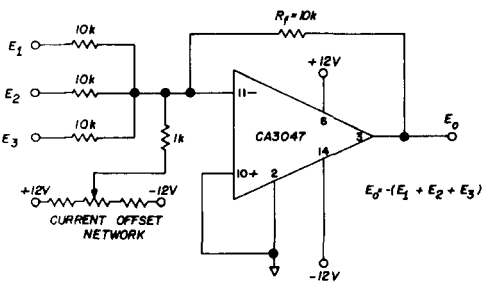

fig. 16. Adder-subtractor. Larger values of feedback resistors will result in a gain greater than unity.

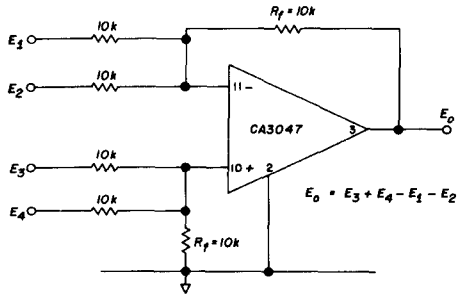

fig. 17. Weighted adder. The sum of the inputs is a function of the feedback resistor; any reasonable combination of Rf and Ri is permissible.

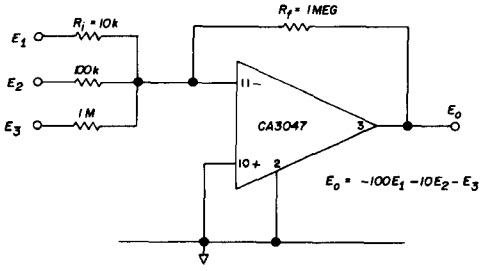

resistor value affects the sum of the inputs. The weight of the adder is proportional to input gain, which is determined by the feedback resistor.

Other mathematical operations in computers are integration and differentiation. The former is used to find the area under a curve; the latter determines the slope of a curve at any point. In the integrator of **fig. 18A,** a chopper-stabilized amplifier should be used because of the offset error caused by the feedback capacitor. If not chopper stabilized, a feedback resistor must be used.

Gain response of the integrator is maximum at the low frequencies and decreases linearly with increasing frequency. Amateur application of such a circuit would be in a lowpass filter following a speech clipper to attenuate harmonics.

In the idealized differentiator, gain increases indefinitely with frequency. To eliminate high-frequency noise problems, gain limiting is provided by R_1 in the circuit of **fig. 18B.** This circuit is also useful for filter applications; frequency response is determined by the RC constants according to the equations shown.

oscillators and waveform generators

Of the many operational amplifier circuits used in computers, probably the most popular amateur adaptations are oscillators and their close relatives, the multivibrators.

If you have a need for an oscillator with an unusually pure sine wave output, the *Wien bridge*[1] *circuit in* **fig. 19** *is a good candidate.* It is inherently temperature dependent, however. In the circuit shown, stability is improved with a lamp operating at very low current.

The multivibrator circuits in **fig. 20** have appeared in various forms in many amateur publications. They're used in electronic keyers, frequency counters, square-wave genera-

fig. 18. Integrator, A, and differentiator circuit, B. Double amplifier symbol in A denotes chopper stabilization required because of offset error due to Cf.

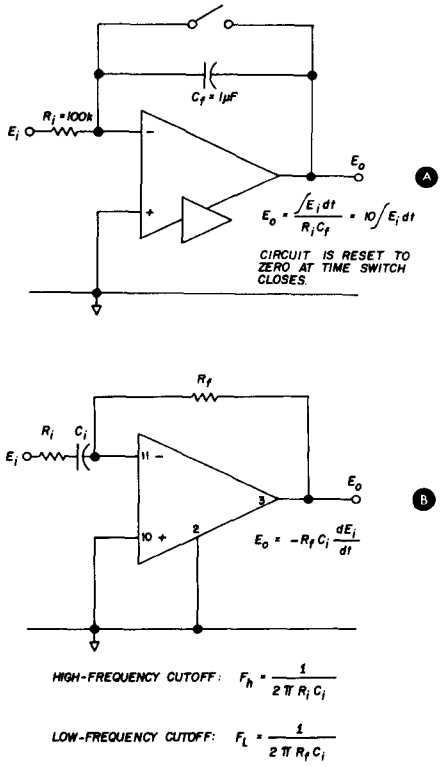

tors, and a host of other circuits where a controlled signal source is required.

The circuit of **fig. 20A** is an astable, or free-running multivibrator. Its uses include a timing-pulse generator, or clock, in counters. Feedback to the positive input is called "bootstrapping." This effectively increases circuit gain until it approaches infinity.

The bistable multivibrator (**fig. 20B**) has two stable states, each of which changes only when triggered by a pulse of opposite polarity. This circuit is used as a memory storage, counter, or shift register in computers. Its principles are often used in amateur circuits with little or no modification.

The monostable multivibrator, **fig. 20C,** is also called a one-shot. It has one stable state which can be changed by an external pulse. It will then return to its original state after a time period determined by its RC constants. The one-shot is used for a time delay or to produce a pulse of specific width when triggered.

An application where the integrator feedback capacitor is allowed to charge is shown in **fig. 21.**[2] During a finite period, the input pulses will add algebraically until the amplifier saturates. When the switch is closed, the

fig. 19. The Wien bridge oscillator. The circuit is temperature sensitive; stability is improved by the lamp, which operates at low-current level.

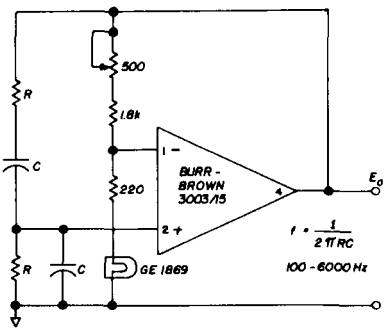

fig. 21. Staircase generator. Ramp output results if a dc signal is applied to pin 11 through a resistor.

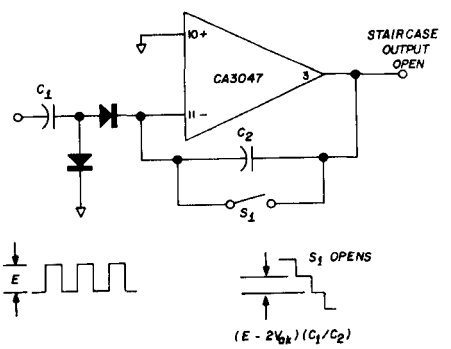

fig. 20. Examples of the multivibrator. Circuit at A is free-running, or astable. B is a bistable multivibrator, or flip-flop. Monostable, or one-shot, is shown at C.

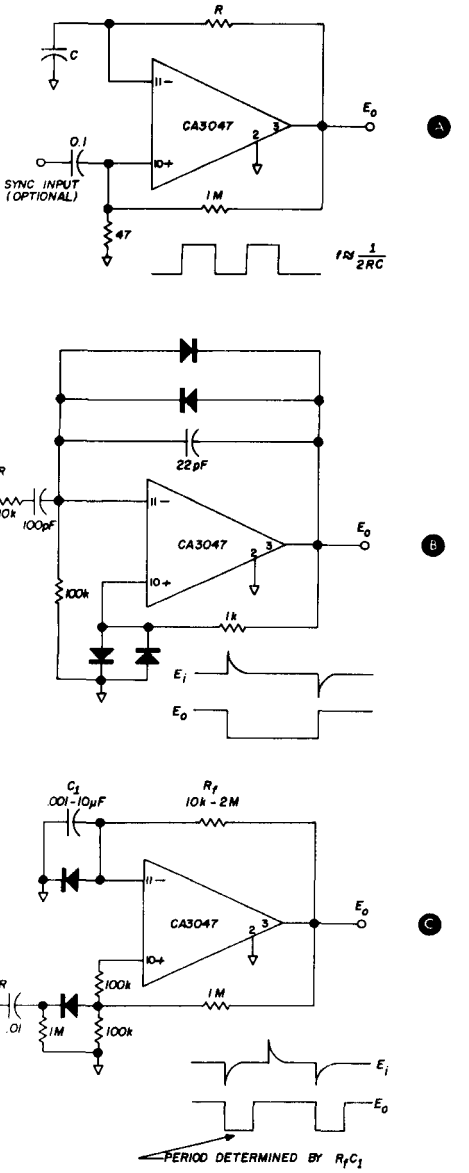

output returns to zero. The circuit shown generates a "staircase" wave; it can be used as a ramp generator if a dc signal is applied to pin 11 through a resistor. Successively opening and closing the switch would give a sawtooth output.

Systems frequently require phase compensation for stability. Precise adjustment may be made with the technique shown in **fig. 22.** Adjustable lag is obtained by changing the input bypass capacitor; lead adjustment is provided by varying the feedback resistor. Resistors R_1 and R_2 may be necessary to stabilize the system.

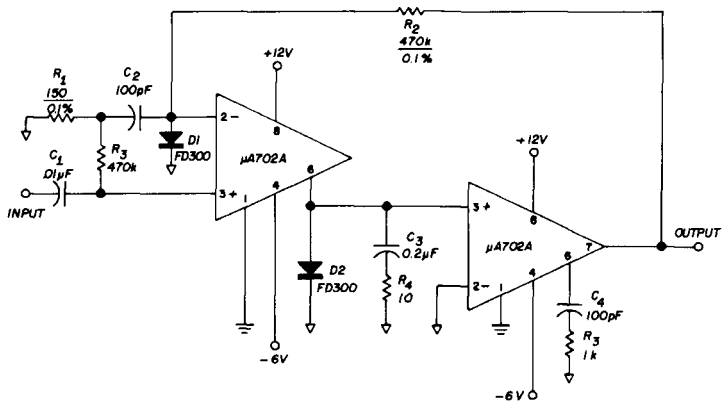

fig. 24. Precision ac amplifier. Gain is 70 dB; input impedance is 100 megohms.

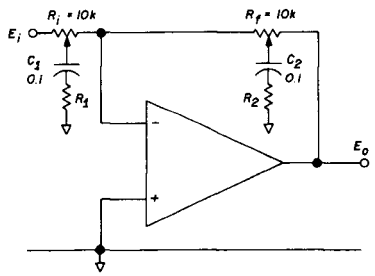

fig. 22. Phase-shift network for system stabilization. Lead and lag compensation are shown.

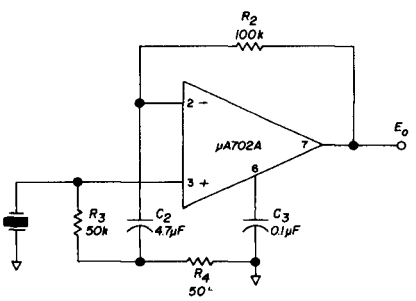

fig. 23. High input impedance amplifier for crystal transducer.

amplifiers

In addition to the basic amplifier circuits previously shown, I've included some useful variations.

The circuit of **fig. 23** is often used in dynamic instrumentation such as vibration measurements. It's a high input impedance amplifier using a crystal as a transducer.[3] A possible adaptation for amateur use would be a crystal microphone preamp.

The amplifier in **fig. 24** has a gain of 70 dB and an input impedance of 100 megohms.[3] Diodes are used to prevent latch-up. Because of the high-frequency characteristics (100 kHz) with the compensation shown, special attention should be given to layout and power-supply decoupling.

The tape-head amplifier[3] of **fig. 25** uses a matched pair of 2N3726's to reduce noise and increase input impedance. Despite the fact that it uses no input resistor (purists may object to classifying this circuit with op amps), the circuit does suggest a technique for improving common-mode rejection and increasing the common-mode range for any op amp.

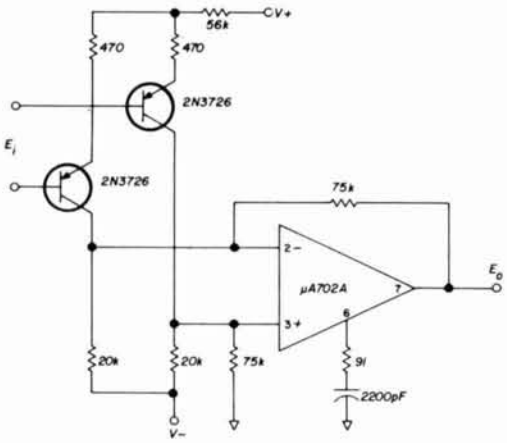

fig. 25. Low-noise tape head amplifier. Matched transistor pair reduces noise and increases input impedance.

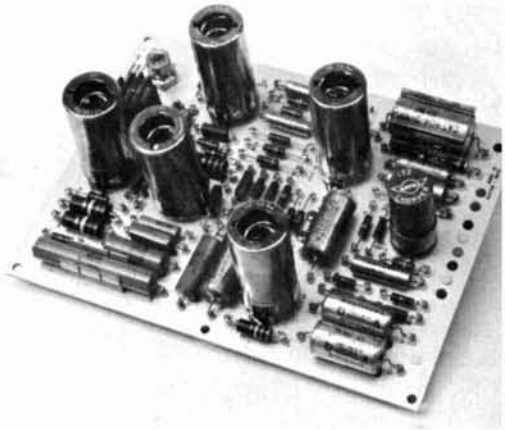

The Philbrick-Nexus USA4JT—"grandpappy of op amps." Very few amplifiers can match its performance. However, this fine unit has been retired to the back shelf because of its large size, aging characteristics, and high power consumption.

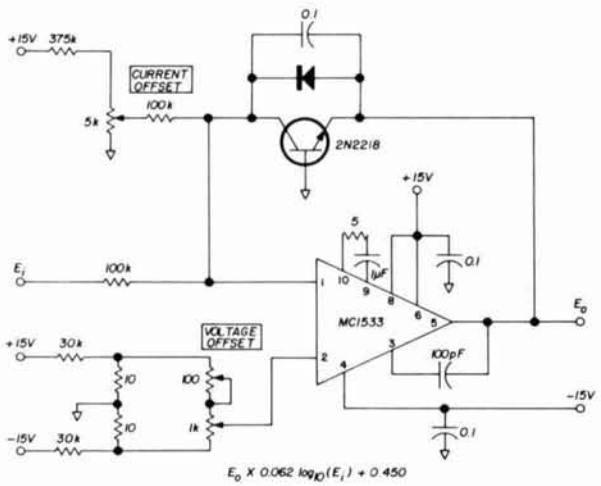

fig. 26. Logarithmic amplifier. Circuit operates over a frequency range of 6 decades.

measurement and control circuits

A widely used instrument is the log amplifier (or log converter). It has the capability of compressing input voltage ranges of several decades into a useful linear range. Some uses for this circuit (**fig. 26**) are in filter measurements, leakage measurements, and as a computer power-function generator. The amplifier shown uses a diode-transistor combination in the feedback circuit to achieve the conversion function.[4] Both current and voltage offsets are required for operation over a 6-decade input range. With an input of 0.13 mV to 100 V, the output is from 220 to 580 mV.

fig. 27. Lossless ac meter circuits. A high-impedance dc meter is preferred for the millivoltmeter circuit, A; a low-impedance meter should be used in the milliammeter circuit, B.

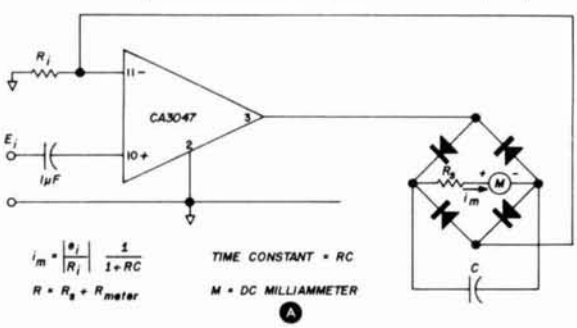

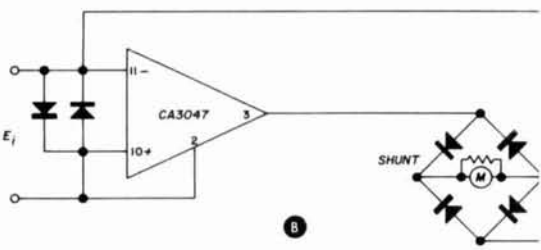

Fig. 27 shows two lossless ac meter circuits. The millivoltmeter circuit, **A,** uses an op amp to compensate for diode, resistor, and meter losses. The response time, which is usually low, can be increased by increasing either the meter series resistor, R_s, or the averaging capacitor, C.

The current-sensitive counterpart of the millivoltmeter, shown in **fig. 27B,** has zero drop across its terminals. Limiting diodes at the input should have very low leakage. No charging capacitor is necessary, because the current is averaged by the meter. Low-impedance dc meters are practical in this circuit, whereas the millivoltmeter performs more efficiently with a high-impedance meter.

In measurement and control circuits, it's frequently necessary to convert ac to dc. The circuit of **fig. 28** using Burr-Brown amplifiers[1] consists of a full-wave rectifier and a filter.*

The time-delay circuit in **fig. 29** requires an amplifier with a high-impedance input such as that provided by an fet. The Burr-Brown 1552/15 is such an amplifier. Of the many uses for this circuit in amateur applications, an example would be to control timing of voltage turn-on in a power supply. Circuit response time would be limited by relay action.

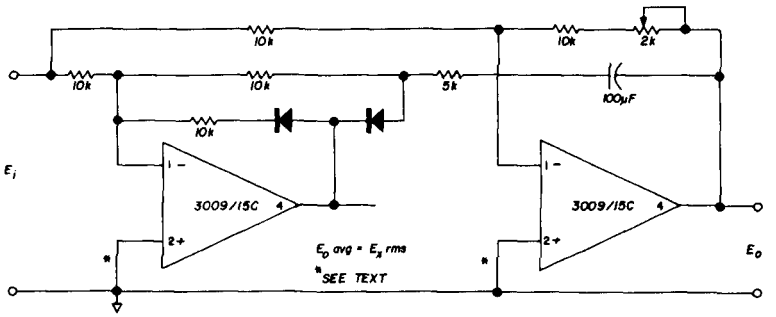

fig. 28. Ac-to-dc converter. Circuit has an input range from 6 mV to 6 V rms at 10 to 1000 Hz. Amplifier is a Burr-Brown IC.

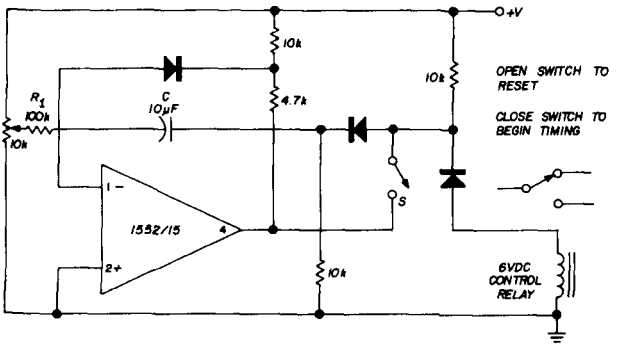

fig. 29. Timing control circuit. Minimum delay is determined by R1-C; maximum delay is infinity.

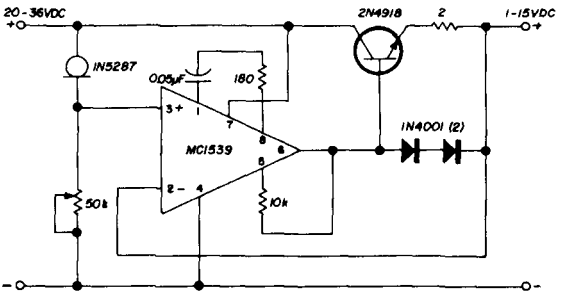

fig. 30. A power supply that provides up to 200 mA between 1 and 15 volts. Regulation is better than 0.01%!

power supplies

The Motorola MC1539 op amp is the center of precision in the circuit of **fig. 30.**[5] This supply provides up to 200 mA at any voltage between 1 and 15 volts. Regulation is better than 0.01% The unusual reference supply consists of a constant-current diode (type 1N5287) and a 50 kilohm potentiometer.

The amplifier has a gain of 120,000, so it won't load the reference. Note that output compensation is between pins 5 and 6, and input compensation is between pins 1 and 8. The circuit is protected against burnout from short circuits.

*Although not shown in the schematic, each amplifier should have a resistor between pin 2 and ground. These must be chosen to minimize output errors due to input offset current. The resistor for the second amplifier will be critical because of changes in circuit impedance as a function of input voltage swing. **Editor**

voltage reference

A more sophisticated reference supply uses its own op amp, a National Semiconductor LM101 (**fig. 31**).[6] The 1N827 reference diode is temperature compensated. Regulation is 0.01 mV/V, and temperature stability is ±0.05% from −55°C to 125°C. Short-circuit protection for the reference is provided internally. The LM101 needs only one compensating component, the 33-pF capacitor.

reversible, precision power supply

This supply, **fig. 32,** is a classic representation, because many basic concepts can be demonstrated by analyzing its characteristics.

A Fairchild A00-7 amplifier, referenced to a stable source, drives a dual buffer that increases the output-current capability. By reversing the reference-supply polarity, the output reverses and switches to the opposite half of the buffer.

Digital programming of voltage is practical by changing the values of R_f and R_i. The system shown is limited to a gain of unity, which means that the output is never less than the reference voltage.

Several important parts of the circuit should be noted. First, the op amp must have a larger voltage swing than the buffer output voltage. The op amp and buffer are compensated separately. This may not be possible if there's much wire between them.

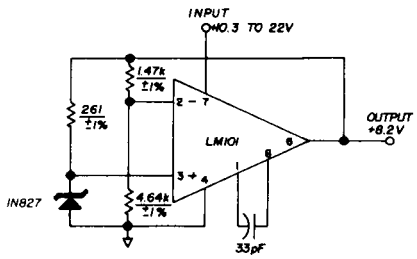

fig. 31. Voltage reference source. Regulation is 0.01 mv/V; temperature stability is ±0.5% from −55° to 125° C.

Another interesting feature is the zener diode clamp in the op amp feedback circuit. This prevents the amplifier from locking in saturation. Back-to-back zeners limit input voltage swing in either polarity. The

fig. 32. Reversible, precision power supply. Digital programming of voltage is practical by varying Rf and Ri; zener diode clamp in feedback circuit prevents locking in saturation.

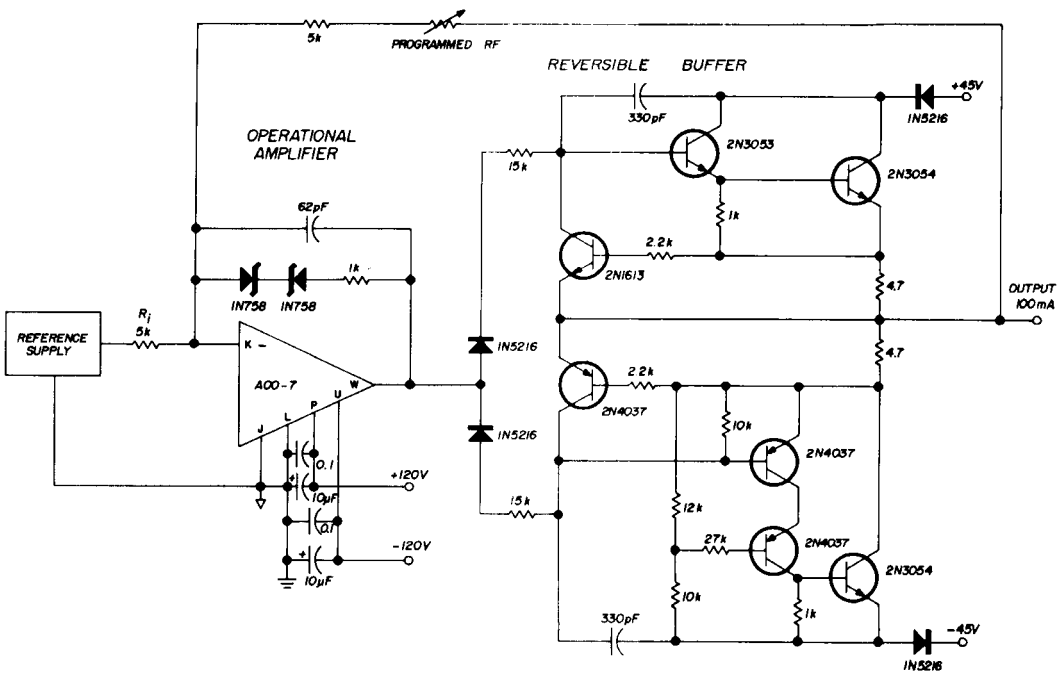

buffer is protected against short circuits by a transistor limiter. This cuts off the pass transistors when the current through the 4.7-ohm resistor becomes excessive. Output of the A00-7 is limited by the 15k resistor.

active filters

A nice thing about active filters is that you don't need inductors to achieve near-ideal mathematical response characteristics. Another good feature is high input impedance, which means that matching is not a consideration.* While compensation for the operational amplifier is necessary, filter reactance trimming is not. Once you've calculated component values for a specific response, you're done.

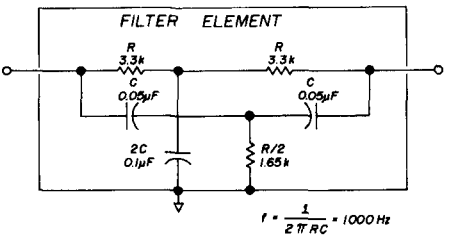

fig. 34. A Twin T filter for use in an op amp circuit. Bandpass is 1000 Hz; with input and feedback resistors of 10k and 100 the gain would be 10. The product CiRi should be greater than twice CR.

A circuit that's easy to understand is shown in **fig. 33.** A filter in the feedback circuit of a conventional inverting amplifier yields an output with the response characteristic of the filter.

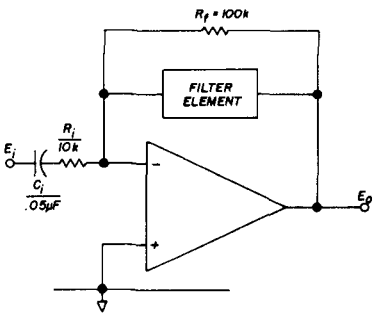

fig. 33. The op amp in a filter circuit. Filter in the feedback circuit yields an output with response characteristic of the filter element.

A possible filter is the Twin T shown in **fig. 34.** A 1000 Hz bandpass filter is in the basic circuit. If R_i = 10k and R_f = 100k, the gain will be 10 at 1000 kHz. The Twin T is one of the simplest (first-order) filter elements; however, it has relatively low Q, so don't expect miracles from it.

The circuit of **fig. 33** may be used with an active high pass, low pass, or rejection-notch filter by inserting the appropriate filter element. Reference 7 provides more information for active filter designs.

Another practical approach toward building an improved filter is to precede a conventional filter with an op amp follower (**fig. 35**). This circuit eliminates filter input loading problems. Although resistor R is chosen to

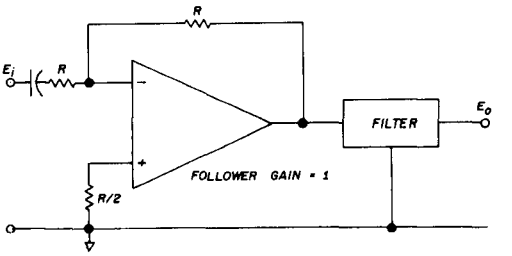

fig. 35. Preceding a conventional filter with an op amp follower to eliminate input loading. Input impedance of amplifier is arbitrary, as explained in the text. Resistor R should equal the input impedance of the filter.

equal the filter input impedance, the resistor is really used to match the input of the preceding stage. The input impedance of the op amp is arbitrary.

A follower on the filter output would be useful if a varying load is used. The purist will argue that this isn't a true active filter. I'm willing to concede the point, but I hasten to add that it's a **handy technique.** I encourage the amateur to take it from here.

a parting thought

I've presented some basic data on one of the most interesting and challenging products of modern solid-state technology. The circuits shown are the most commonly used, but by no means do they cover the entire

*True for this circuit, but not for controlled source and negative immitance converter techniques. **Editor**

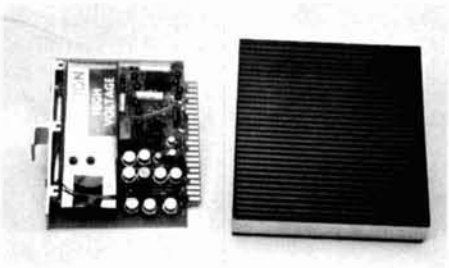

A noteworthy successor to the best tube op amps is the Fairchild A00-7. It features discrete components, built-in compensation, and chopper stabilization.

field of possible applications.

If you wish to adapt these circuits to your needs, a good grasp of op amp theory is essential; the material listed in the references will supplement that in the first part of this article. Some possible projects that come to mind are:

1. An ultra-stable oscillator (for system synthesis).
2. A precision filter for selective calling.
3. A high-impedance meter for measurement of h_{fe} or g_{fs}.
4. A precision digital power supply.
5. Science Fair computer projects.

I'm sure you've thought of a few projects, too.

references

1. "Handbook of Operational Amplifier Applications," Burr-Brown Research Corp., Tucson, Arizona.
2. H. A. Wittlinger, "Application of RCA CA3033 and CA3033A, etc.," RCA, Electronic Components, Harrison, New Jersey.
3. "Linear Applications Manual," Fairchild Semiconductor, Mountain View, California.
4. "Integrated Circuit Data," Motorola Semiconductor Products, Inc., Phoenix, Arizona.
5. "Motorola Monitor," Vol. 7 No. 1, Motorola Semiconductor Products, Inc., Phoenix, Arizona.
6. "Ideas for Design," *Electronic Design*, January 18, 1968, p. 128.
7. "Handbook of Operational Amplifier Active RC Networks," Burr-Brown Research Corp., Tucson, Arizona.
8. "Application Manual for Computing Amplifiers," Philbrick-Nexus, Dedham, Massachusetts.

RCA has all-new FCC commercial license training

Get your license— or your money back!

Now RCA Institutes Home Study Training has the FCC License preparation material you've been looking for—all-new, both the training you need, and the up-to-date methods you use at home—at your own speed—to train for the license you want!

2 Convenient Payment Plans—You can pay for lessons as you order them, or take advantage of easy monthly payment plan. Choose the FCC License you're interested in—third, second or first phone. Take the course for the license you choose. If you need basic material first, apply for the complete License Training Program.

SPECIAL TO AMATEURS. *This course is primarily for Commercial License qualifications. But it does cover some of the technical material that will help you prepare for the new Advanced and Amateur Extra class tickets. Check out the information the coupon will bring you.*

Mail coupon today for full details and a 64-page booklet telling you how RCA Institutes Home Training can show you the way to a new career—higher income—and your FCC License.

RCA

RCA INSTITUTES, INC.
Dept. HR-N9
320 West 31st Street, New York, N.Y. 10001

Please rush me, without obligation, information on your all-new FCC Commercial License training.

Name_____

Address_____

City_____ State_____ **Zip**_____

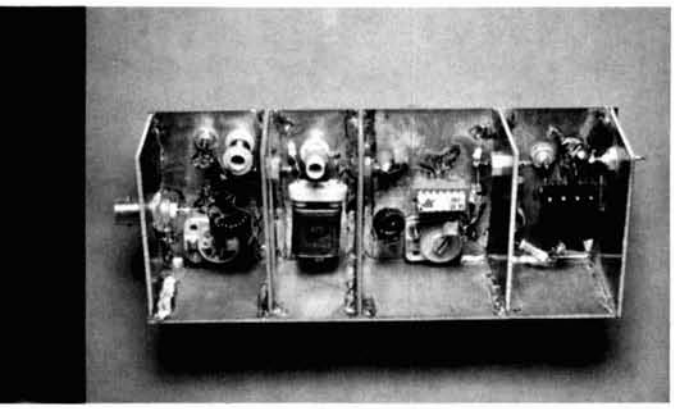

a fixed-tuned receiver for wwv

Hank Olson, W6GXN, P. O. Box 339, Menlo Park, California 94015

Many modern amateur receivers are ham-band-only types and must have an adapter to receive WWV. Even if you're using a general-coverage hf receiver, it is quite a nuisance to go "way up the band" to get WWV so you can set your 100-kHz crystal calibrator. Wouldn't it be convenient to have an entirely separate, fix-tuned WWV receiver **only** to check the calibrator? The simple receiver described below fills the bill with just a few components.

This WWV receiver is designed for 15 MHz, but it could be used on 20, 10 or even 5 MHz with changes in the resonant circuit elements. (For receiving WWV on 2.5 MHz, it is probably easier to modify a transistorized broadcast receiver.)

The majority of U. S. amateurs probably use the 10- or 15-MHz transmissions of WWV or WWVH, especially during daylight hours; so 15 MHz was chosen for this receiver.

the SA-21 integrated circuit

The heart of the WWV receiver is a Sylvania SA-21 video amplifier. This integrated circuit has a useful frequency range that extends beyond 100 MHz, which is quite a bit more bandwidth than many of us are accustomed to calling "video." Used as a narrowband amplifier, the SA-21 provides over 50 dB gain at 15 MHz, as shown in **fig. 2.**

fig. 1. Sylvania SA-21 internal circuit. Voltages are nominal quiescent values at 25° C.

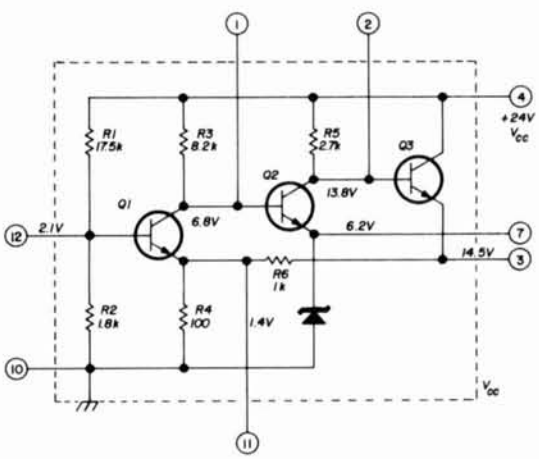

Unlike most linear microcircuits, the SA-21 is **not** a differential transistor amplifier; its internal circuit is shown in **fig. 1.** Both figs. **1** and **2** were taken from reference 1.

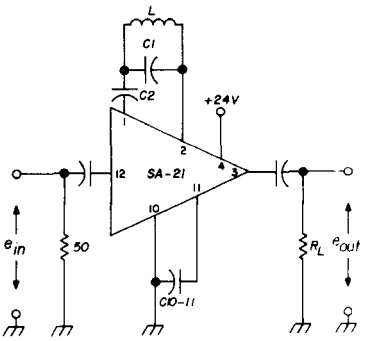

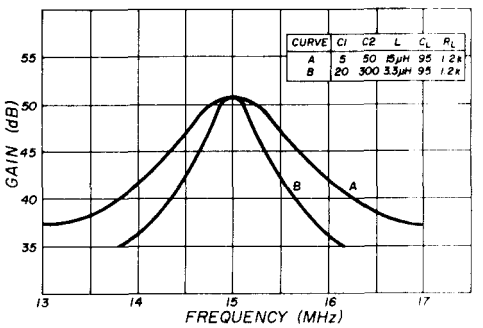

fig. 2. Bandpass response of the Sylvania SA-21 wideband amplifier. Curve B was used in this design.

the receiver circuit

The WWV receiver schematic is shown in **fig. 3.** An rf stage and simple crystal filter are used ahead of the IC amplifier to provide the selectivity required in such a trf circuit. An fet is used as an rf amplifier, because it has inherently good cross-modulation immunity and provides a higher input impedance in the common-source configuration than a bipolar transistor in the common-emitter configuration. The higher input impedance of the fet means that the step-up ratio of the antenna transformer, L1, must be large, which in turn produces higher operating Q (better selectivity).

crystal filter

The crystal filter is very simple. A slug-tuned inductance in parallel tunes out holder capacitance. The resulting filter circuit is then as shown in **fig. 4.**

A 15-MHz crystal which is cut for series resonance should be used. I tried an old CR18/U crystal, cut for 32 pF operation, with partial success. One would expect this crystal to have its passband on the low side of 15 MHz, but the passband center frequency was at 14.998 MHz (2 kHz low). This was close enough to allow intelligible copy of WWV, since the filter bandwidth is about 6 kHz. Replacement of the CR18/U crystal provided somewhat better fidelity.

detector and audio stages

Following the SA-21 amplifier is a simple diode detector, a 1N270, and an IC audio amplifier, PA234. The General Electric PA234 is the least expensive of a family of their amplifiers IC's, PA222, PA234, PA237 and PA246. The PA234 will provide up to 1 watt of audio. It is a modified dual in-line package (DIP). Every other pin is omitted on the PA234. Also, a heat sink tab protrudes from the end containing pins 7 and 8. This makes for easy PC board mounting (lots of room between pins). However, in this particular receiver, both IC's are mounted in 14-pin DIP sockets.

construction

The receiver is partitioned into four shielded sections: rf amplifier, crystal filter, SA-21 and detector, and audio amplifier. Power for each section (except the crystal filter) is brought out through the top plate via 1000-pF feedthrough capacitors. Decoupling the +22.5-volt supply bus is quite important (don't try any shortcuts)! Decoupling elements are ferrite beads and an rf choke. The Ferroxcube ferrite beads (K5-001-00/3B) present about 50 + j50 ohms at high frequencies; so if you **must** substitute, bear this in mind.[2]

The IC's were mounted in plastic DIP sockets made by Methode (M1141). These are particularly suitable, because each has

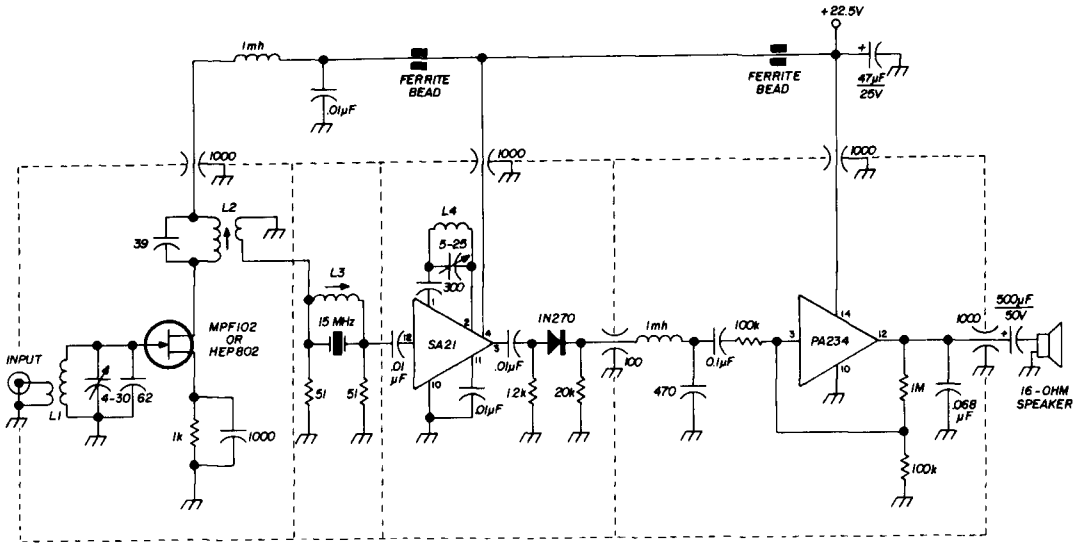

L1 1.35 μH, 19 turns no. 20 on Micrometals* T50-10 core, with 3 turns no. 22 primary

L2 2.0 to 3.7 μH, CTC X2060-1 with 4 turns no. 26 secondary

L3 10 to 18 μH, C.T.C. X2060-4

L4 3.3 μH, 30 turns no. 26 on Micrometals* T44-10 core

fig. 3. WWV fixed-tuned receiver schematic. Note shielded compartments and decoupling circuit.

two mounting holes between pin rows. These holes can be tapped for 4-40 screws and the sockets mounted in a stand-off configuration with two small ceramic spacers (left over from the last Centralab wafer switch you assembled). This puts the IC socket pins down near the ground plane for low-inductance grounding or bypassing. The socket for the PA234 is crowded next to the end plate so the heat sink tab may be easily soldered.

The entire assembly is made of sheared epoxy-glass, double-sided, copper laminate of the type used to make PC boards. This material is easily soldered into a rigid rf package (no solder lugs are needed, saving space). The rf conductivity is superior to that of an aluminum chassis. I found that the bottom plate and one side could be left off without causing instability, so the chassis work is complete as shown in the photo.

the toroid coils

A word is in order about L1 and L4. They are wound on powdered iron toroids. These particular toroids are **made for the frequency** and give substantially better performance than most other coils (except perhaps miniductor or Airdux types used in open space). The curves of Q vs frequency for the two toroids are shown in **fig. 5.**

Another advantage of these powdered iron toroids (made by Micro Metals)* is their lack of temperature sensitivity. Unlike ferrite cores, these toroids have remarkable stability of both inductance **and Q** with temperature. If you decide to use coils that are not toroids to replace L1 and L4, more shielding may be required to prevent oscillation.

*Micrometals, 72 E. Montecito Avenue, Sierra Madre, California 91424

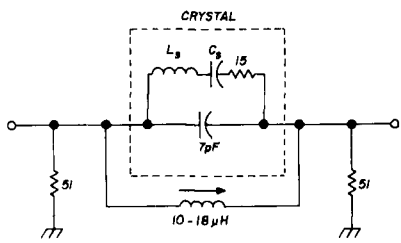

fig. 4. Equivalent circuit of 15-MHz crystal filter. Crystal is AT cut, series resonant.

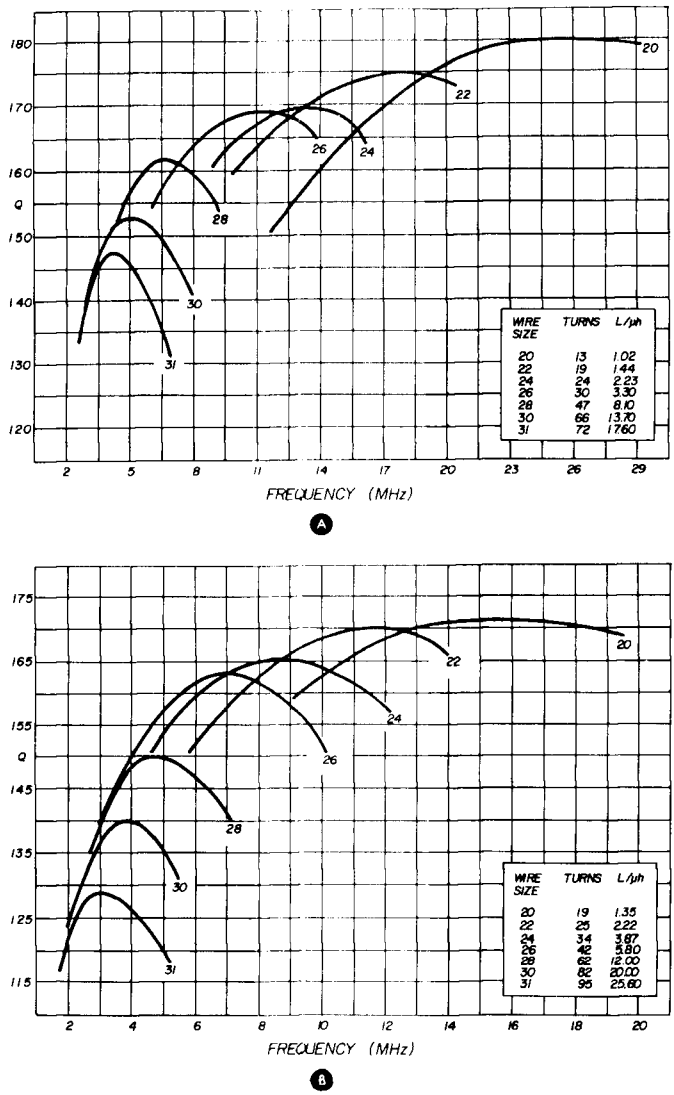

fig. 5. Operating Q as a function of frequency for the Micro Metals T44-10 toroid, A, and the T50-10, B. L1 and L4 were constructed from this data.

operation

The unit is powered by a 22.5-volt battery (Burgess 4156) and idles at about 25 mA. Strong signals will push current consumption up as high as 75 mA, but that's getting pretty loud!

No agc or gain control is included in this unit; a variable attenuator is used ahead of the rf amplifier.[3] During the day at my location, about 20 dB of attenuation is used. You might argue that this is a crude approach; but let's face it, that's the best place to control gain in a fixed-tuned receiver.

references

1. "Wide Band Video Amplifier, SA-20 Series," Sylvania Data and Application Sheet, February 15, 1967.
2. H. Olson, "Ferrites, or What's Mu with You," CQ, April 1966, pp. 49-52.
3. G. Daughters and W. Alexander, "Low-Power Attenuators for the Amateur Bands," *73*, January 1967, p. 40.

ham radio

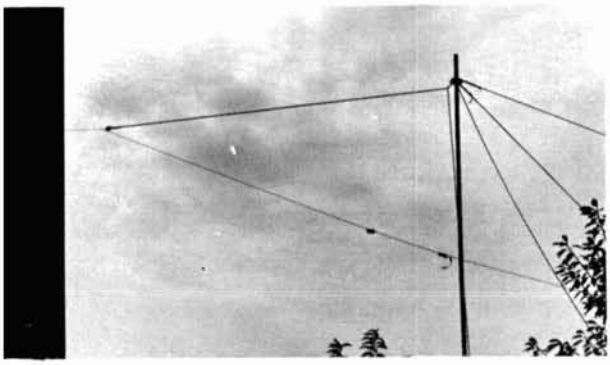

a multiband long-wire antenna

Design details for a low-cost efficient radiator

Edward M. Noll, W3FQJ, 3510 Limekiln Pike, Chalfont, Pennsylvania 18914

Would you like a multiband antenna that favors the direction of hard-to-get states or countries, yet has good omnidirectional coverage? One answer is the long wire, a much neglected antenna that deserves more recognition.

The long wire is mentioned often in the literature. Information on feed methods is meager, however, which may be why it's seldom used. If you have about 300 feet of reasonably clear space, you can erect the long wire described here and enjoy excellent performance on 40 through 10 meters. Depending on the feed method, the antenna gives either unidirectional or bidirectional coverage, with substantial gain in the direction of the wire. Power gain over a dipole is from 1.2 to 7, corresponding to lengths from 1 to 12 wavelengths. (Numbers are ratios, not dB.) Minor lobes, concentrated near the center of the wire, provide omnidirectional response.

The single long wire is probably the simplest antenna you can build that will provide maximum gain for lowest cost and effort. Only two masts are required; however, one will do (at the far end) if you use your eaves

to support the near end. The tilt thus provided increases radiation at the low vertical angles for DX, as discussed below.

principles

The dipole, which is one-half electrical wavelength long, is the simplest resonant antenna. Two major lobes occur at right angles to the antenna **(fig. 1).** If the wire length is increased in multiples of one-half wavelength, the antenna will also be resonant at these points. Additional lobes appear as the wire length is increased. The major lobes move in the direction of the wire, so that maximum radiation is concentrated off the end.

The longer the wire, in multiples of one-half wavelength, the greater will be its gain in the direction of the major lobes as compared to a dipole. The secondary lobes, **fig. 1,** give good omnidirectional coverage.

feed point

Resonant long-wire antennas can be center- or end-fed **(fig. 2).** A low-impedance point is made available at the center by making each leg an odd multiple of a quarter-wave-length long. Contrary to a rather wide belief that the precise length of a long-wire antenna is unimportant, the leg lengths must be accurately cut to obtain a low-impedance feed point.

fig. 1. Horizontal radiation pattern of long wire as a function of length.

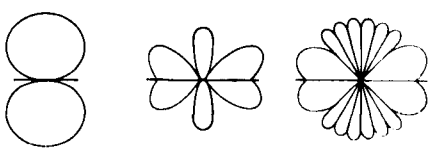

A low-impedance feed point for end feed is found a quarter wavelength in from the transmitter end of the long wire. End feeding is a preferred method for two reasons. The antenna is more unidirectional with a higher gain in the direction of the long leg. The longer the long leg, the higher the gain and the more directive the pattern becomes off its end.

It is apparent from the above that a long-wire antenna can be erected to favor a given area. If a group of states give you trouble, point the antenna in their direction.

If you prefer a bidirectional pattern, use a center feed. If you live along the East Coast, the long leg can be pointed west. Conversely, for a western station, the long leg can be directed east. In the Central States you may prefer a bidirectional center-fed type, or perhaps you might want the end-fed unidirectional characteristic if you are having difficulties with certain states.

antenna length

Each leg must be an odd multiple of a quarter-wavelength for center feed.

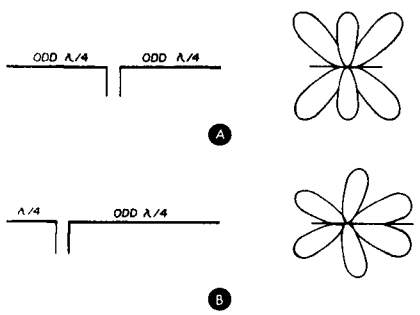

fig. 2. Center feeding the long wire, A, and end feed, B, with respective patterns.

$$\text{leg length} = \frac{246\ (N)}{f\ \text{MHz}}$$

Where N is the number of quarter wavelengths.

End effect is important on these long wires, and you must trim the legs evenly to reach a given resonant frequency. Start with the formula given above, and prune until resonance is obtained. Usually, the antenna must be shortened from two to six percent as a function of antenna height, tilt, and nearby conducting surfaces.

Antenna resistance is low and varies slowly with length, **fig. 3.**[1] **Fig. 4** shows two end-feed methods for different antenna lengths. Using the coax cable impedance shown, you can obtain a match with an swr of about 1.5:1 without a tuner.

The length of the short leg of the end-fed type can be calculated using the regular dipole equation. The long leg must be made some multiple of a quarter wavelength.

$$\text{long leg} = \frac{246\ (N)}{f\ \text{MHz}}\ (N)\ \text{feet}$$

$$\text{short leg} = \frac{234}{f\ \text{MHz}}\ \text{feet}$$

Again, the antenna legs must be trimmed carefully to find resonance and establish a feed-point impedance that can match the transmission line. Short sections should be trimmed off the quarter-wave segment to obtain resonance just as you trim an ordinary dipole. Because the long leg is so very long, you can trim off larger pieces of the antenna wire in moving toward the desired resonant point.

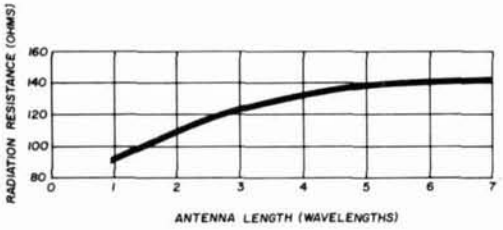

fig. 3. Change of radiation resistance with length of longwire antenna.

For the end-fed long-wire, it is helpful to first set the quarter-wave dipole leg to resonance. Then the longer leg is trimmed for a minimum swr. Two useful instruments for trimming this antenna are an swr meter and an antenna noise bridge. Always connect an swr meter in the line at some point that is a whole multiple of an electrical half wavelength away from the antenna feed point.

In fact, it is advisable to use a transmission line that is a multiple of a half wavelength between antenna and transmitter. In so doing, the low resistive impedance of the antenna is reflected to the transmitter, and the transmitter need not cope with reactive components that can be introduced by the line, however small its standing wave ratio.

multiband operation

For optimum results the long-wire antenna should be resonated on each band. There are three ways to do this. A tuner can be mounted at the feed point, but this presents a weather-proofing problem.

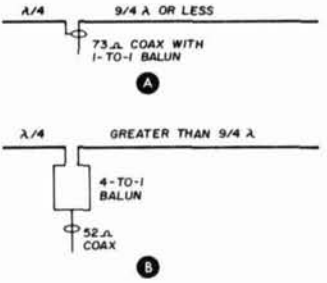

fig. 4. Two methods of feeding a long wire at the end. A swr of about 1.5:1 can be obtained using three systems.

Furthermore, the tuner must be retuned when changing bands or when shifting operation from one part of the band to another.

Reasonable results can be obtained by using a tuner at the transmitter. However, this technique makes the transmission line a part of the antenna, and the antenna pattern can be affected adversely. Furthermore, a high swr can develop on the line. Recall that a tuner at the transmitter actually works for the transmitter and does very little for the antenna system.

The third possibility is to preset the long-wire antenna for each band. This can be done by bringing the antenna ends down near the ground level (**fig. 5A**). This causes no serious pattern change. The antenna can be trimmed carefully for each band to obtain optimum operation without the use of any tuner.

For DXing the long-wire can be tilted slightly in the direction of the long leg (**fig.**

Insulator-jumper combination.

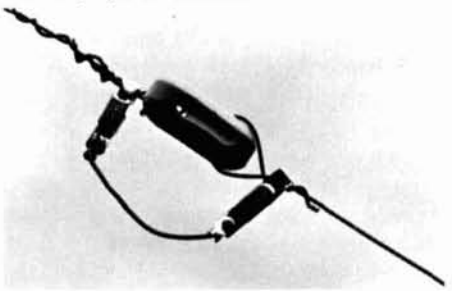

5B) to improve the low-angle radiation in the favored direction. The angle increases in the opposite direction.

W3FQJ end-fed long wire

The arrangement and dimensions of a practical antenna are given in **fig. 6.** The quarter-wave dipole segments are easy to set up and permit 10- through 40-meter operation. A band change is made quickly by proper arrangement of the jumpers at each end of the antenna. For 20-meter operation the first jumper is left open. For 15-meter

fig. 5. To avoid use of tuner, long wire ends are brought near ground and carefully trimmed for resonance, A. Antenna bandwidth will be quite narrow. At B, tilting the wire improves low-angle radiation slightly in direction of tilt.

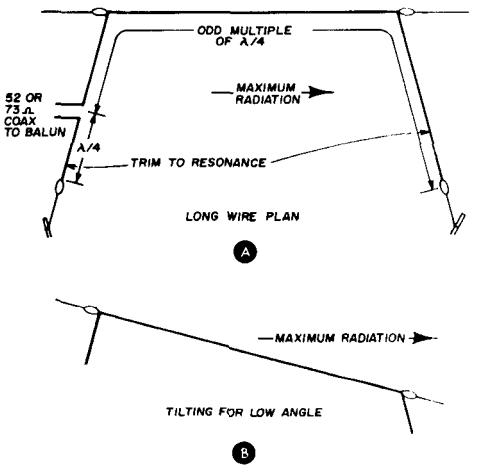

operation the first jumper is closed, and the second jumper is opened. On 20 meters the first two jumpers are closed, and the third jumper is opened. All jumpers are connected for 40-meter operation.

The long leg of the antenna is 9 quarter-wavelengths long on 40, 17/4 on 20, 25/4 on 15, and 33/4 on 10. Formula values are

$$(40)\ \text{leg length} = \frac{2214}{7.2} = 307 \text{ feet}$$

$$(20)\ \text{leg length} = \frac{4182}{14.2} = 294 \text{ feet}$$

$$(15)\ \text{leg length} = \frac{6150}{21.3} = 288 \text{ feet}$$

$$(10)\ \text{leg length} = \frac{8118}{28.6} = 283 \text{ feet}$$

After trimming, the practical lengths reduce to 297 feet 7 inches, 271 feet, and 272 feet 10 inches respectively. Note that the same leg length can be used for both 10 and 15 meter operation. Thus in changing operation between these bands, only the near-end jumpers need be shifted.

results

Results have been gratifying on all four bands. The bearing of the long leg, as erected here in Eastern Pennsylvania, is set at 255°. On 10 meters, where the directivity is sharpest, this places a strong-signal area diagonally across the Continental United States. At the same time, good reports are obtained in the Southern States and in North Central States, thanks to the secondary lobes. Of course, on the lower bands the number of electrical wavelengths on the legs is not as great, and the horizontal radiation pattern is less sharp, encompassing a larger area of major-lobe coverage.

references

1. "Antennas and Radio Propagation," Dept. of the Army Technical Manual TM 11-666, February, 1953.

ham radio

fig. 6. The multiband, segmented long wire at W3FQJ. Coax cable should be at a right angle to feed point if possible.

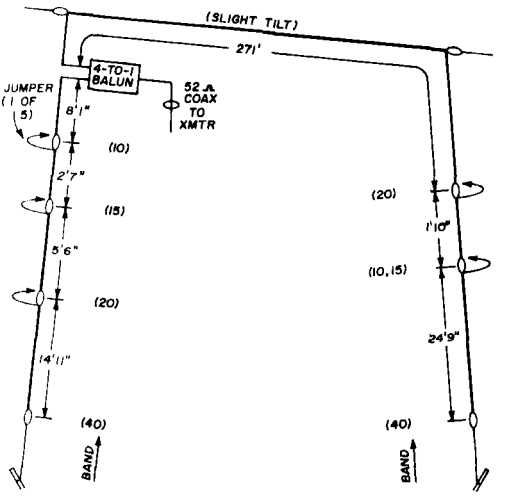

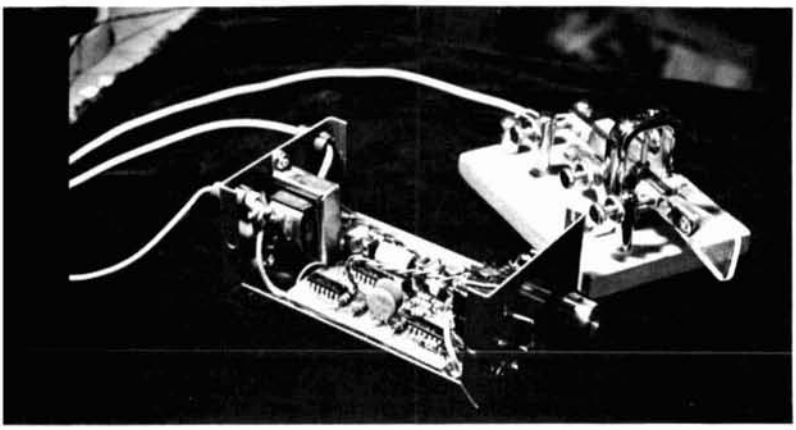

one more electronic keyer

A dot memory ensures positive character formation in this improved version of the TO keyer

G. D. Young, VE7BFK, 14409 West 11th Avenue, Vancouver 8, British Columbia

During the past few years several articles have appeared describing the electronic key.[1,2,3] Here's one more. This key is a TO type and is basically the same as the one described by K3CUW in *QST*.[1] Its features are:

1. A dot memory
2. Small size
3. Npn or Pnp transistor switching
4. "Squeeze-key" operation if desired.

I'll start by offering some motivation for its design, followed by a review of the integrated circuit (IC) characteristics.

I first became familiar with electronic keys with the construction of an all-transistor TO key,[4] which I used extensively for about five years. In constructing a new key, I felt I should strive for increased ease of operation and a substantial reduction in size. (The key mentioned above occupied 3½x6x8 inches on the operating table.)

For easier operation, an electronic key must have a memory. Keys have been described with dot and dash memories,[5,6] but I decided that a key with a dot memory would only be best for the reasons given below.

If you now use an electronic key with no

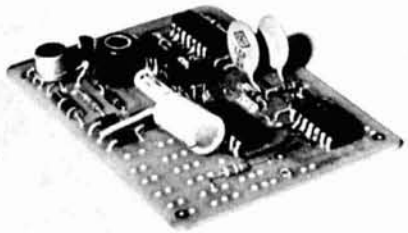

Main circuit board.

memory, you know that one of the most common errors is the omission of a dot in letters such as n, k, c, y, etc. This error can be corrected if a dot memory is included, which will insert the dot if the paddle is closed during the preceding dash.

Because it's longer, a dash followed by a dot is seldom omitted. The natural tendency to hold the paddle on the dash side for a longer time ensures that the dash will be formed.

A dash memory would be required if the key had a free-running clock, as in the Ultimatic.[5,6] However, I felt that a **gated** clock would make the key easier to operate, because the response to touching the paddle is immediate. The free-running clock key may delay up to a whole dot duration before doing anything.

The small size requirement suggested, (1) integrated circuits and, (2) that something be done about the huge filter capacitors ordinarily required for low-voltage, high-current power supplies. An electronically regulated supply takes care of the latter problem.

review of ic operation

The IC's used in this keyer should be in fairly common use by now.[7] For completeness, however, I'll include a brief description of their operation. Rather than consider IC operation in terms of Boolean functions, I'll regard them as black boxes with particular characteristics. I believe it's less confusing to use this approach for a practical understanding of their operation.

The symbols and names are borrowed from the language of Boolean algebra (for example, the gate is a **NOR** gate). But it's best to understand the way in which the circuit works rather than the logic functions involved.

Let's first consider a gate. Its symbol, and a table describing its operation, are as follows:

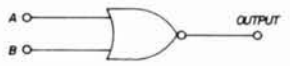

A	B	OUTPUT
H	H	L
H	L	L
L	H	L
L	L	H

Note that H stands for a high-voltage level, and L stands for a low-voltage level. For the gate, the table shows a high level out for two low levels in, but low level out otherwise.

A flip-flop is represented by this symbol and truth table:

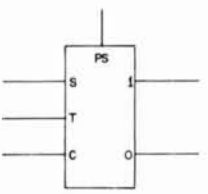

S	C	1 OUTPUT
H	H	NO CHANGE
H	L	H
L	H	L
L	L	COMPLEMENT

A high level on the preset (PS) terminal results in a low output at the 1 terminal. Any other change of state of the flip-flop requires a negative-going pulse on the toggle (T) input. (This pulse must be **fast,** I might add—less than 100 ns for the IC's used in this keyer.) The terminal-1 output after a toggle is shown in the table.

A printed-circuit board for this keyer is available for $3.00 from Stafford Electronics, 427 South Benbow Road, Greensboro, North Carolina 27401; order part no. HR 11-69A. A kit of IC's, transistors and diodes (less power supply) are available from the same source for $8.50.

With a low on S and C, the flip-flop changes state (complements), and the outputs return to the same state as the inputs after a toggle if there is an H-L or L-H combination on the inputs.

Now these are the only two different types of IC's used in the keyer, but three simple gate connections are described so a block diagram can be drawn. First, a monostable, or one-shot:

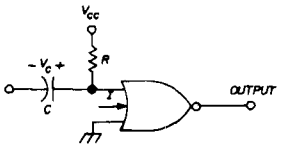

consider the following input signal:

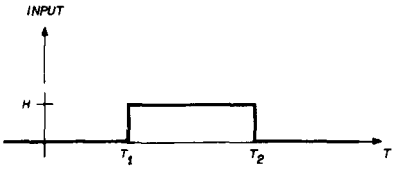

Before t_1 occurs, the capacitor is charged to $V = V_{cc} - RI$, where I is the current flowing into the gate, $V_{cc}/(R + 450)$. (The gate input resistance is 450 ohms.) The gate has an H on one input and an L on the other, so the output is L. At t_1, the input rises to H. The top input of the gate will rise to V + H, then the capacitor discharges to V — H. At t_2 the input falls to zero.

The voltage across the capacitor can't change instantaneously, so the top input to the gate is brought down to V — H, which will be a low level if H is close enough to V. The output of the gate rises to an H level. The capacitor then charges toward V through R_e.* When the capacitor voltage is greater than about 1 volt (a high level), the output falls back to a low. Hence, for an H-to-L transition **in,** we get a pulse of fixed duration **out.**

* R_e is an equivalent resistance that will be a "two-segment" resistor. It consists of R until the gate input transistor turns on, then of R in parallel with the gate resistance after turn-on. The voltage applied to the charge path is V_{cc} before the gate turns on, and V after it turns on.

The second connection is a set-reset R-S flip-flop:

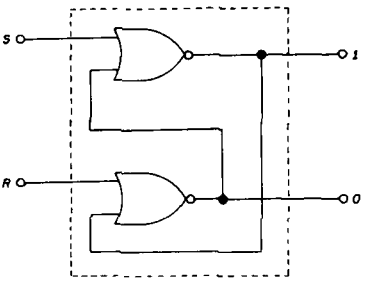

S	R	"1" OUTPUT
H	H	NOT ALLOWED (LOW)
H	L	L
L	H	H
L	L	USUAL CONDITION

For the flip-flop to change state, an alternate high level is required between inputs. Two high levels are not allowed. Even if you could remove them simultaneously, the resulting state would be indeterminate because of different IC switching times. However, during the time two high levels are applied, both outputs will be low, of course.

The third connection is an OR gate:

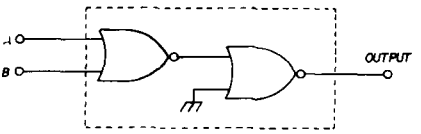

A	B	OUTPUT
H	H	H
H	L	H
L	H	H
L	L	L

The name implies an assignment of positive logic: H is designated 1, but the circuit is still characterized by the H-L description. (That is, a low output for two low inputs; a high output otherwise.) The second gate inverts the output of the first. Note that this circuit is an AND gate if an H level is designated zero and L is designated 1.

the TO keyer

The TO keyer is familiar to most amateurs, but for completeness, its block diagram is shown in **fig. 1A.** Clock pulses toggle FF1 whenever the clock is enabled. When

the dot contacts are closed, the clock and FF1 are enabled, producing the output as shown in **fig. 1B.** When the dash contacts are closed, both flip-flops are enabled, and the output looks like the waveform in **fig. 1C.** Hence we have a guaranteed one-to-one dot/space ratio and a three-to-one dash/dot ratio. This is the defining characteristic of the TO keyer.

Additions to the basic TO keyer block diagram for a dot memory are shown in **fig. 2.** When the dot contacts are closed, the memory is set and the clock and FF1 are enabled. This causes a dot to be formed. Once formed, a pulse from the output resets the memory, so only **one** dot is sent. With the block diagram in mind, let's look at the complete circuit (**fig. 3**).

toggling voltage

The clock is as described by K3CUW.[1] When a high level is at point A, Q4 is saturated. Because V_{CESAT} (saturation collector-emitter voltage) is less than V_{BE} (**ON** base-emitter voltage), Q5 is cut off. Point B is thus at 1.8 volts, C3 is charged to $1.8+V_{BE}$, and Q3 conducts the saturation collector current of Q4. When the dot or dash contact is closed, point A goes low, Q4 is cut off, and Q5 conducts. This reduces the voltage at point B, which biases Q3 even more into conduction, causing more base drive to Q5. The voltage at point B is further reduced. Finally, C3 is discharged to $V_{CESAT} + V_{BE}$, at which point Q5 ceases to conduct. The voltage at point B increases, which cuts off Q3 until the capacitor charges to $1.8 + V_{BE}$ again, then the whole process repeats. Result: nice, fast $1.8 - V_{CESAT}$ negative pulses—good for toggling flip-flops.

fig. 1. Basic block diagram of the TO keyer, A, with dot and dash waveforms, B and C.

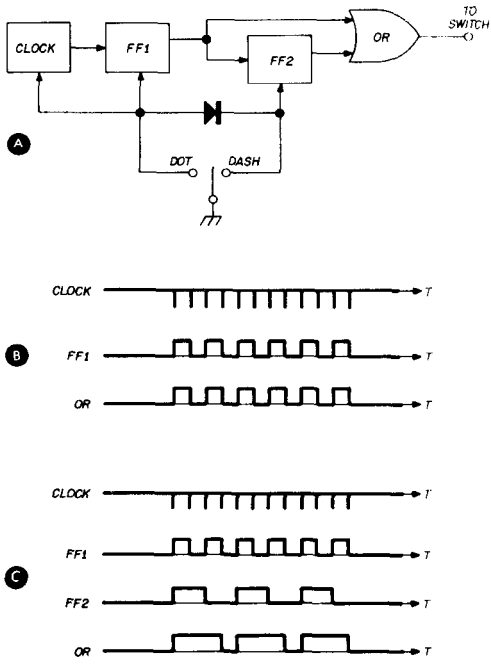

fig. 2. TO keyer with dot memory added.

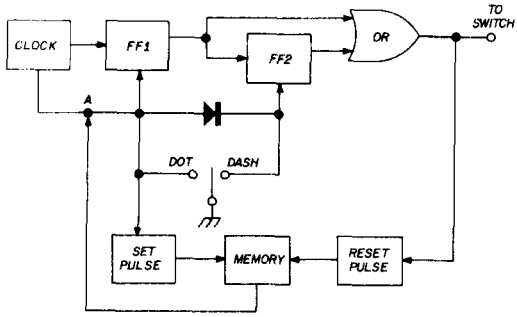

The PS and S terminals of both flip-flops are grounded. There are only two possible input states for the flip-flop: complement (both S and C low) and a low output on terminal 1 (high input on C). A flip-flop can be considered disabled with a high input on C and enabled with a low input on C, if complementing is the desired operation.

A high input is applied to both flip-flops and to the clock (point A, **fig. 3**) when the keyer paddle is in the center, so everything is quiet.

dot formation

Closing the dot contact enables the clock, enables the dot flip-flop, and sets the dot memory. Recall that a high-to-low transition on the input of a one-shot gives a pulse out, and the terminal 1 output is low when a high voltage is on the top input terminal. Thus, point A is kept low by the memory when set.

The first clock pulse puts FF1 in a high

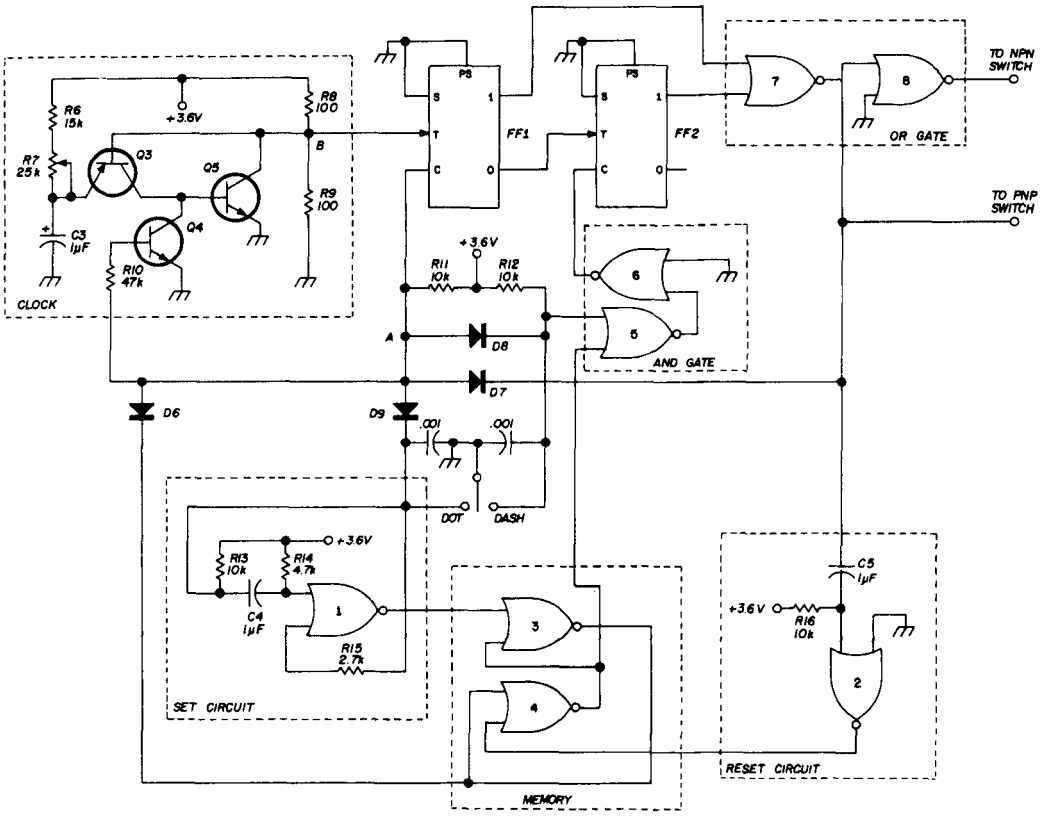

fig. 3. Complete schematic of the keyer. Memory and reset circuits ensure positive dot formation with no omissions.

state, and the high-to-low transition of FF1's 0 output puts FF2 in a low state, because its C terminal is high.

The second clock pulse puts FF1 to a low state. During this time, the clock remains enabled because point A is kept low by diode D8 (this makes the characters self-completing). Gate 7's output goes low as soon as the 1 output rises to a high on the first clock pulse. Also, the high-to-low transition at gate 7's output gives a reset pulse to the dot memory. The waveforms for a single dot are shown in **fig. 4.**

The reset one-shot provides a longer pulse than the set one-shot. Thus, when they start at the same time, the memory ends up reset. The reset pulse length is about 4 ms. Any shorter pulse would work as well, but 4 ms is long enough to ensure memory reset despite inevitable contact bounce from the paddle. A series of dots is produced by holding the dot contacts closed. The wave-forms in **fig. 4** are then merely repeated, except for the set pulse.

dash formation

Closing the dash contacts produces a series of dashes, as with the ordinary TO keyer. Note that FF2 is enabled or disabled by an AND gate. (To become enabled, the flip-flop requires a low input from the gate, which requires the dash contact output AND the memory output to be low.) The AND gate's function will be described later.

dash-dot sequence

Consider **fig. 5.** Even though the dot contacts were closed and released before the preceding dash was completed, the dot is generated. The low level from the memory

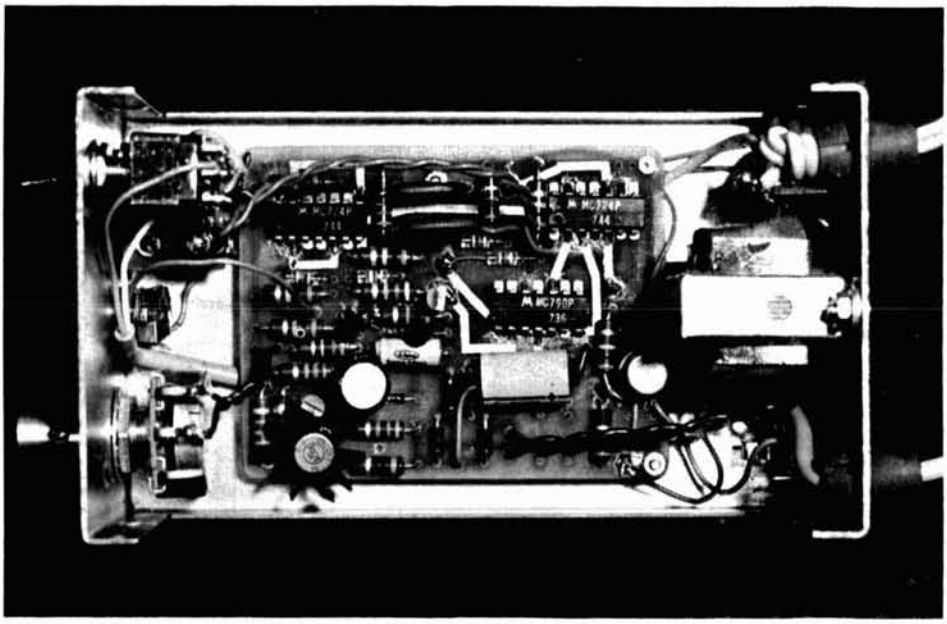

The completed keyer in a Minibox chassis. Pnp transistor switching is used.

keeps the clock and FF1 enabled until the dot is initiated; then the hold circuit, D8, finishes the dot—a neat, fail-safe arrangement.

the AND gate

To illustrate AND gate operation, we'll consider forming the letter k. The waveforms in **fig. 6** result. The dot is remembered as before; however, the dash contacts are closed before the dot begins. If FF2 were not disabled, another dash would be initiated instead of a dot. The zero output of the memory is high whenever a dot is stored, so FF2 is disabled until after the dot is initiated. This feature allows "squeeze" operation, because the memory can be set even when the dash contacts are closed. Once the memory is set, a dot is formed following whatever character is currently being formed.

power supply

The effort to make the key small led to a search for alternatives to the large filter capacitors required in the conventional power supply[1] where "brute-force" filtering is used. The transistor-regulated power supply shown in **fig. 7** was chosen. The resulting size is smaller than one of the pair of filter capacitors.

Diodes D3-D6 form a bridge rectifier whose output is filtered by C1 and regulated with series regulator Q1. The reference voltage is the forward voltage drop of diodes D1 and D2 (about 1.2 volts, because they are silicon diodes). Transistor Q2 is the error-signal amplifier. Capacitors C1 and C2 were chosen by trial and error to reduce power supply ripple to less than ±10 percent, the tolerance in supply voltage specified for the

fig. 4. Waveforms for a single dot. Reset pulse length is 4 ms, which is long enough to ensure memory reset despite contact bounce.

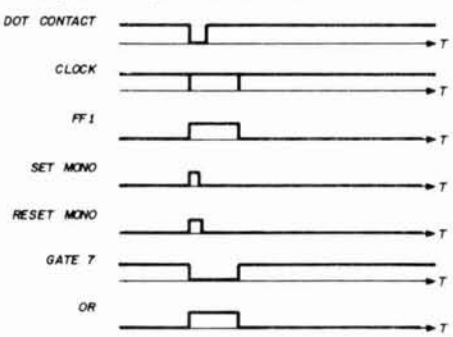

IC's. Larger capacitors would, of course, reduce the ripple even more. R2 supplies base drive to Q1, and the regulation is obtained by Q2 controlling the current at the base of Q1.

R3 provides a few milliamperes of current to the reference diodes, putting them into a lower-resistance portion of their characteristic curve. The output voltage is determined by voltage divider R4, R5. Since the voltage at the base of Q2 is fixed at $V_{BE}+1.2$ volts, the voltage across the divider will adjust to give this value. That is, the output voltage is given by (assuming $I_B << I_{divider}$)

$$V_{out} = \frac{R4 + R5}{R5} (V_{BE} + V_{D1} + V_{D2})$$

The values shown are chosen so that the base current to Q2 (I_B) is very much smaller than the divider current ($I_{divider}$). Because individual diodes and transistors may have considerably different voltage drops, it may be necessary to adjust R4 to obtain the correct output voltage.

keyer circuits

The positive voltages from the IC's ordinarily require the switch to be an npn transistor. Such a keyer circuit is shown in **fig. 8A.** Notice that the key ground is elevated to the voltage across the key terminals of the transmitter. This arrangement requires a little care in mounting the components of the key in its box, and touching the key ground to the transmitter ground will short the transmitter key terminals.

A pnp transistor switch may be used but it requires a negative-going gate pulse to drive it. This gate signal is obtained from the output of gate 7, which is translated by offsetting the transmitter ground by the amplitude of the gate voltage. This offset is obtained by connecting the key supply to transmitter ground via three forward-biased diodes as shown in **fig. 8B.** R17 draws a little current through the diodes to ensure a uniform voltage drop with switching. Again, care is required in mounting key parts, and the consequence of shorting key ground to transmitter ground is more severe, because the key power supply is shorted.

Three of the four keys I've built have been sensitive to rf energy, to varying degrees. A 0.01 μF capacitor across the key power supply near the switch transistor seems to clear up the trouble, and a smaller capacitor often will do. The location of the capacitor may depend on the type of switch because of the grounding arrangement peculiar to the individual system. However, the larger

fig. 5. Waveforms for dash-dot sequence. Dot is generated even though dot contacts were closed and released before preceding dash was finished.

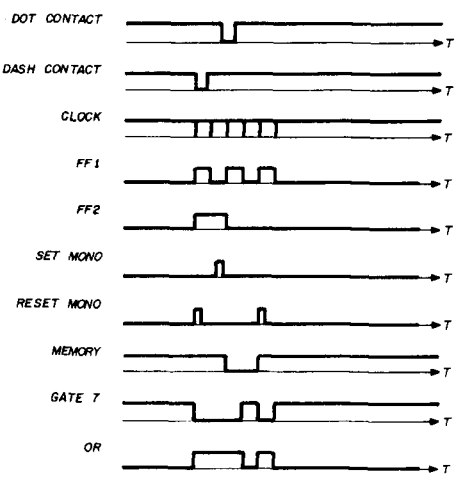

fig. 6. Waveforms illustrating the AND gate operation. This feature allows "squeeze" operation, because memory can be set even when dash contacts are closed.

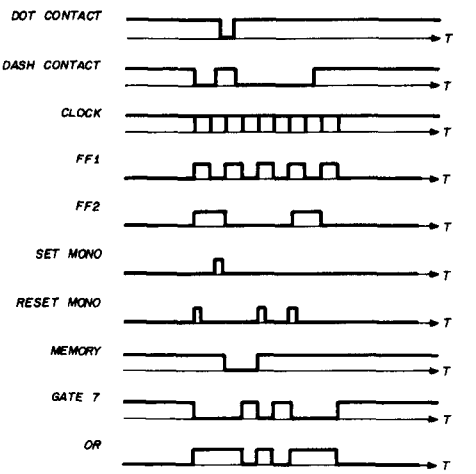

capacitor (0.01 μF is large here) seems to be noncritical as far as location is concerned.

construction

To make the key small, most of the components are mounted on a printed-circuit board. This board was designed to take 1/2-watt resistors, which is a lapse in the effort at miniaturization for the sake of availability of parts. However, 1/4-watt resistors may be used for all except R1, which should be 1/2 watt. As the photos show, the board is quite uncluttered. The region of unconnected terminals is left to mount the switch transistor and its components. If the center row of these terminals is cut away, the board will fit onto the base of a Vibroplex bug between the pivot support and the terminals. I originally intended to mount the key on a Vibro-Keyer, but later decided on a minibox to leave room for additions such as a tone oscillator.

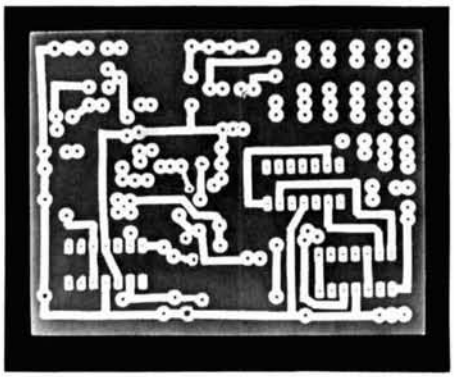

Bottom of the printed circuit board.

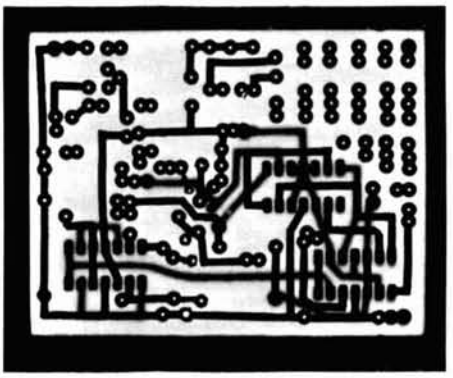

Printed circuit board viewed from below, top lighted to show top wiring.

choice of devices

Motorola integrated circuits are used in the layout shown, but other RTL digital IC's are fine (the first keyer was breadboarded using Fairchild μL923 and μL914). The Motorola packaging has more devices with fewer leads, so they're smaller than the Fairchild IC's. The transistors are all noncritical, but they should be silicon. Q1, of course, must be capable of handling the power, and the switch transistor must handle the voltage and current at the key jack.

Mototola manufactures several suitable switches: MJE340 (300 volts), neon drivers 2N4409 (80 volts) and 2N4410 (120 volts), for example. The only pnp switch I am familiar with is the 2N398A (105 volts) manufactured by RCA, Sylvania, Motorola, and possibly others.

some recommendations

Capacitors C4 and C5 can't be electrolytic, because the polarity of the voltage across them changes. They must also be 1 μF or more to ensure that contact bounce doesn't cause the memory to be set. 1-μF, 3-volt ceramic discs (Centralab UK-105) are quite small and easily obtained. Diodes D6, D7, D8 and D9 must be germanium because of their lower voltage drop. Silicon diodes with their higher voltage drop cause some flip-

fig. 7. Regulated power supply for the keyer. R4's value may have to be adjusted because of different voltage drops in transistors and diodes.

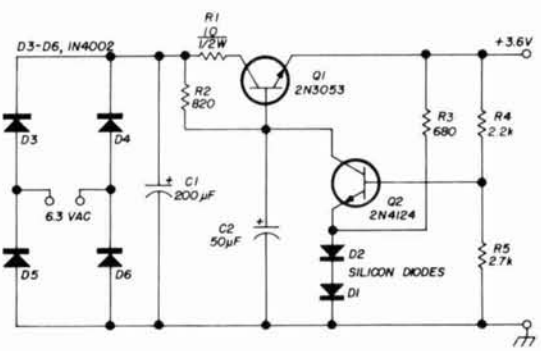

flops to remain disabled even with point A low. However, silicon diodes are required for D1 and D2 because of their higher forward voltage and lower **on** resistance. The rectifier diodes are Motorola 1N4001 or 1N4002, because they're small. Any other diode with a rating of at least 100 mA and 25 PIV will work fine.

cured this problem by making R14 4.7 kilohm.

The keyer described here requires quite a bit of power: about 90 mA at 3.6 V. I built another keyer using Motorola milliwatt devices (MC776P flip-flops and MC717P gates) and replaced R8 and R9 with 470-ohm resistors. The new unit operates

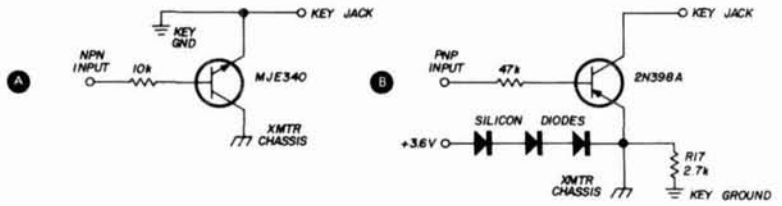

fig. 8. Keyer circuits. Npn transistor switch is shown in A; pnp switch in B. Care is required in mounting parts to avoid shorting key circuit grounds to transmitter ground.

The AND gate formed by gates 5 and 6 cannot be replaced with a diode AND, because the voltage drops are too high.

Resistor R15 was included in the set one-shot to reduce the sensitivity of this circuit to noise. If the input that's connected to R15 is returned to ground, as in the reset one-shot, the memory will occasionally be set when a noise pulse gets on the power-supply line. This will result in a stray dot.

Because electrolytic capacitor tolerances are so wide, several potential problems can develop. There may be a wide variation in the values of R6 and R7 in the clock speed control. Also, I originally used a 10 kilohm resistor for R14, which caused the set pulse to be longer than the reset pulse because C4 and C5 weren't close enough in value. I

Component layout.

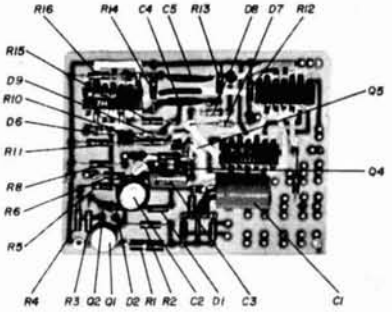

from two penlight cells, and current drain is about 17 milliamperes!

A tone oscillator would be a useful addition. I'd appreciate hearing from anyone who comes up with a sine-wave oscillator-amplifier that will operate at 3.6 volts and drive a small speaker.

acknowledgements

Special thanks are due Otto Meier, HB9AFE, for laying out the PC board and assistance in designing the circuit. The photographs were taken by my brother, Richard Young and by Mark Hansen, VE7BGE.

references

1. Chet Opal, K3CUW, "The Micro-TO Keyer," *QST*, August, 1967.
2. Jack Burchfield, W8CRD, "The Integrated Keyer," *CQ*, December, 1967.
3. Richard P. Halverson, WØZHN, and Ronald A. Stordahl, KØUXQ, "An Integrated Circuit Electronic Keyer," *QST*, December, 1962.
4. James C. MacFarlane, W3OPO, "A Monitored Electronic Key and Keyer," *QST*, December, 1962.
5. John Kaye, "The Ultimatic, the Key with a Memory," *QST*, February, 1953.
6. Thomas Pickering, W1CFW, "The Micro-Ultimatic," *73*, June, 1966.
7. Norman Pos, WA6KGP, "Digital Logic Devices," *QST*, July, 1968.

ham radio

HENRY RADIO PRESENTS THE DELUXE *Cygnet 270*

A "go-any place ... do everything" transceiver by SWAN

A 5 BAND 260 WATT SSB TRANSCEIVER WITH BUILT-IN AC AND DC SUPPLY, AND LOUDSPEAKER, IN ONE PORTABLE PACKAGE.

Just hook up an antenna and microphone, connect the '270' to a power source, and you're on the air. And don't let its small size fool you. The Cygnet 270 is loaded with features that make its price tag even more attractive. Besides being a great one piece home station, it is a wonderful unit for use on business trips and vacations. The '270' will operate from auto, boat, motel room or mountain cabin...anyplace that a power source is available. The price...only $525.00 at all Henry Radio stores.

Come on in for all of the specifications and a demonstration. If you can't come in... call or write. We'll send you the specs and, of course, we ship almost anyplace in in the world.

Henry Radio has a great antenna package program . . . big savings. Write for literature.

EASY FINANCING • 10% DOWN OR TRADE-IN DOWN • NO FINANCE CHARGE IF PAID IN 90 DAYS • GOOD RECONDITIONED APPARATUS • Nearly all makes & models. Our reconditioned equipment carries a 15 day trial, 90 day warranty and may be traded back within 90 days for full credit toward the purchase of NEW equipment. Write for bulletin.

TED HENRY (W6UOU) **BOB HENRY** (WØARA) **WALT HENRY** (W6ZN)

CALL DIRECT . . . USE AREA CODE

Henry Radio Stores

931 N. Euclid, Anaheim, Calif., 92801 714 772-9200
11240 W. Olympic, Los Angeles, Calif., 90064 213 477-6701
Butler, Missouri, 64730 816 679-3127

"World's Largest Distributor of Amateur Radio Equipment"

antennas and capture area

Some basic definitions of the antenna as an energy transducer

Jim Kennedy, K6MIO, 5465 E. Hampton, Fresno, California 93727

It's almost impossible to discuss antennas without terms such as "capture area," "gain," "aperture," and "directivity" entering the conversation. Reason dictates there must be some interconnection between these concepts, yet incorrect statements are often heard such as "A colinear broadside is, in general, better for receiving than a Yagi since the colinear has more capture area." This indicates the relationship of these very important ideas is often subject to confusion.

There are many ways to analyze antenna performance. Some antennas, such as a dipole or an array of dipoles as in a colinear broadside, are often analyzed by considering (a) the net effect of the phase and amplitude of the fields from each individual dipole, and (b) the relative location of the dipoles. Such an analysis can become quite involved mathematically, but could be carried out for any array. With the aid of a computer you could produce a detailed plot of the antenna pattern in any desired plane and indicate the gain and other essential parameters.

While each type of antenna may have one convenient mathematical description, there are many ways to analyze any antenna. One general approach is to determine its **capture area,** or to use the precise language of physics, its **diffracting aperture.** In principle we can learn almost all we wish to know about an antenna's radiation characteristics if we know the dimensions of its capture area. It may seem surprising that this would produce the radiation field pattern, but it will, and other information as well.

Note I say "in principle." In practice the work to produce these results may be prohibitive, depending on the antenna. Determining the capture area for many antennas may be difficult, but adopting this approach will allow us to discuss any antennas qualitatively.

aperture

Since it forms the foundation of all that follows, the definition of capture area deserves some attention.

In most practical situations, one is concerned with how an antenna performs as a

radiator and how it performs with respect to a passing wave. The wave is sensibly plane if we consider a **small region** of space. That is, we may consider the wave as an endless succession of plane-wave fronts perpendicular to the line of travel.

The wave carries energy, so a certain power density is associated with it: so many watts per square meter of wavefront area. Every antenna has an area called the **capture area,** or **aperture,** that will intercept some part of the wave area. The capture area may be quite different than the area occupied by the actual antenna structure. This is discussed later.

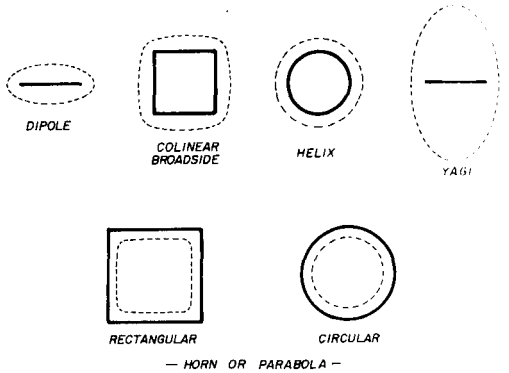

fig. 1. Typical apertures (dotted lines) for common antennas. Solid lines represent the boundaries of the physical structures.

We can now relate capture area to receiving antenna gain. If a wave front of five microwatts per square meter impinges on an antenna of one square meter capture area, five microwatts would appear at the antenna output terminals. A second antenna with twice the capture area would receive ten microwatts. Gain is therefore proportional to capture area.

The capture area of a half-wave dipole is usually used as a reference standard for measurements. Sometimes an **isotropic source** is used as a reference. Such a source radiates energy in all directions equally. (The sun is an example.) For an isotropic source, gain is given by

$$G = A \frac{12.6}{\lambda^2}$$

where A is the capture area and λ is the wavelength. The fraction in the right-hand term is a units conversion factor. The optimistic claims for antenna gain you sometimes see in advertisements are often based on an isotropic source. Obviously, any antenna characteristics based on this idealized reference should be viewed with caution.

Note that nothing has been said about the **shape** of the capture area. As far as gain is concerned, the capture area shape is superfluous. However, I'll explain later how the shape is important for other reasons.

size and shape

I mentioned that capture area may be different from the antenna structural area. A

fig. 2. An edge view of a Yagi showing how plane-wave fronts (dotted lines) are bent towards the dipole by the director slow-wave structure. This results in a "magnification" of the dipole aperture.

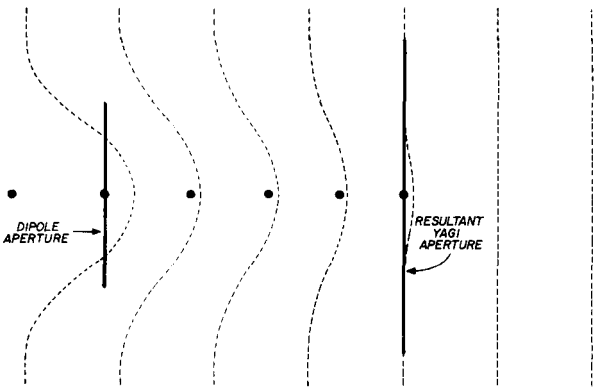

simple example of this is the half-wave dipole. This antenna could be of very thin wire with extremely small physical area. It has a fairly large capture area, though, because it does deliver power to a receiver.

The dipole's shape implies an oblong aperture. Within limits, its aperture is independent of its physical area. A dipole's aperture is about 0.13 square wavelength. Comparisons of apertures of different antennas are given in **fig. 1.**

The colinear broadside antenna is an array of phased dipoles. Its capture area is somewhat larger than its physical structure.

This is a photograph of the diffraction pattern produced by a 16-wavelength circular aperture. The photograph was made by uniformity illuminating a 10-micron hole with red laser light. The light coming from the hole was then allowed to strike the film. The bright central spot represents the main lobe, which is about 8 degrees in diameter. The bright ring is the first side lobe.

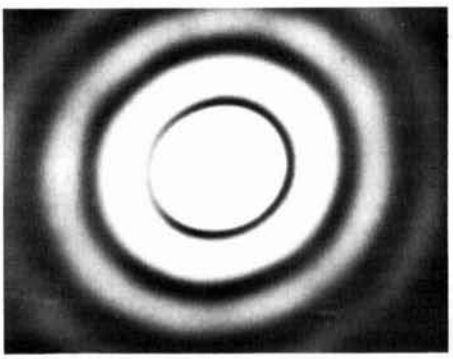

This is another photograph of the 16-wavelength aperture pattern. The central portion has been deliberately overexposed to show the details of the much weaker side lobes.

This is because the capture areas of the dipoles overlap the total area. An analogy is a brick wall. Each brick (dipole capture area) has its own shape. In combination with the other bricks you see the entire wall, not each brick.

Another example of an antenna whose capture area is similar to its physical area is a dipole or waveguide horn with parabolic reflector. Both the colinear broadside and parabolic antennas are examples wherein aperture size and shape depend on physical structure. More details on the problems of parabolic antenna design appear in an earlier article.[1]

the Yagi antenna

One of the more difficult capture areas to analyze is that of the Yagi and helix antennas. Both are related, but the Yagi is more familiar to amateurs. Therefore, it will be discussed in some detail.

In the **plane** of the passing wave, the structural area of the Yagi is about the same as that of a dipole. Yet the Yagi has more receiving gain. Why?

The Yagi functions by a slow-wave structure composed of a series of directors (reflectors are not applicable here). As the wave passes each director, it excites a current in the element. The director is shorter than a half wavelength, so these currents re-radiate a wave that is delayed in phase from that of the original wave. As the wave passes each director the wave front is slowed from its free-space velocity. The part of the wave farthest from the director is slowed less. As shown in **fig. 2** the wave folds in on itself. Thus, energy that would have missed the driven element is focused onto it.

Stated another way, the Yagi collects energy from a much larger area than the element itself. Therefore, the Yagi may have the same capture area and hence the same gain as a colinear array many times its physical size. This exposes the fallacy in the statement about colinears versus Yagis.

About the same can be said for the helix.

Here the wave is slowed because it tries to follow the helix, which means its forward progress is much slower than its speed along the spiralling wire.

The shape of the Yagi aperture is elliptical with its longest dimension perpendicular to the dipole. The circular helix has a circular capture area. (see **fig. 1**.)

diffraction

The preceding discussion established the existence of a real capture area of varying shape. While the gain has nothing to do with the shape of the aperture (only its area), the

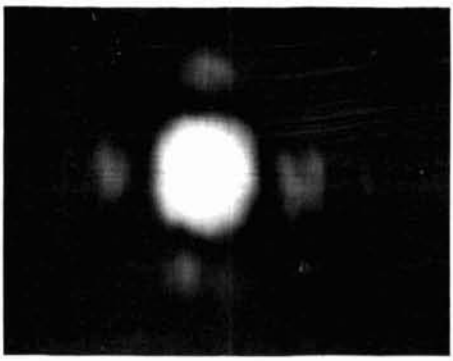

This pattern was produced by a very poor square aperture. Note the more-or-less square shape of the main lobe and compare the side lobes with those of the circular aperture.

shape of the area does vitally affect the antenna **field pattern.** To understand this, it is first necessary to discuss diffraction.

Although the connection may not seem clear at first, consider a plane wave approaching a large sheet of conducting material with a hole in it, as shown in **fig. 3.** Further, assume the hole is **small** compared to a wavelength. Since the sheet is conducting, the wave can penetrate only through the hole. The electric field must satisfy the conditions that the component of the field parallel to the conducting surface, **at that surface,** must be zero. This condition is met on the left side of the sheet by the generation of a reflected wave (not shown), which is out of phase with the incoming wave **at the surface.**

On the right-hand side, this boundary condition can only be met if the field direction is perpendicular to the surface **at the surface,** since it is forced to start that way inside the hole.

The final result, as shown in **fig. 3,** is that the original wave, which was going in one direction, to the right, is now converted to a spherical wave spreading in all directions on the right-hand side of the hole. An observer to the right sees a plane wave coming from the hole and spreading into a spherical wave. In fact, the conducting sheet isn't even necessary. Whenever a plane wave emerges from a very small hole (in terms of wavelength), it spreads out. This is called **diffraction.**

To relate diffraction and **antenna pattern,** first observe that if an antenna receives energy from a certain capture area or hole, it must also **radiate energy from that same hole.**

antenna patterns

The principle of diffraction can be used to gain information about the antenna pattern

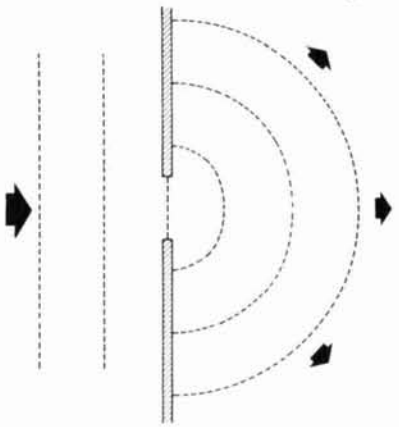

fig. 3. Diffraction of a plan wave from an extremely small aperture.

in general. Instead of working out the details, which require an application of calculus, I'll show the general approach and state part of the result.

Consider an aperture large compared to a wavelength. The aperture is made of a large number of very small, adjacent apertures (the brick analogy again). Each small aper-

ture will radiate more or less uniformly in all directions, as in the previous special case.

At some arbitrary distant point from the large aperture, an observer attempting to determine the net effect would find that each small aperture is out of phase with its neighbors. This is because each small aperture is at a slightly different distance from the remote point, depending on the angle with respect to that point. This is illustrated in **fig. 4** for the first and last "brick." Note that the distance to the first aperture is **a,** and to the last it is **a + b.** The radiation intensity at the remote point as a function of θ is the field pattern. To derive this, the mathematical calculation, in effect, shrinks all the small apertures to zero, then sums up this infinite number of apertures to find the total effect.

For our purposes it's unnecessary to give the complete expression, although the interested reader will find it in reference 2. Several important features of the pattern can be given. One is that there will be zero intensity, or nulls, at every angle such that

$$\sin\theta = n\frac{\lambda}{d}$$

where λ is the wavelength, d is aperture length, and n can take on values of 1, 2, 3, . . . For each value of n there is some angle at which the pattern has a null.

If it is assumed that a peak exists between these nulls, it follows that the field pattern of a diffracting aperture is a series of peaks and nulls, which resembles an antenna pattern. **Fig 5A** illustrates this and includes all the usual details of antenna patterns.

Any two antennas, regardless of type, that have exactly the same capture area dimensions will produce the same field patterns at the same frequency. They would also have the same gain since they have the same area.

Another characteristic shows up in the null equation. The null angles are inversely proportional to the aperture dimension,

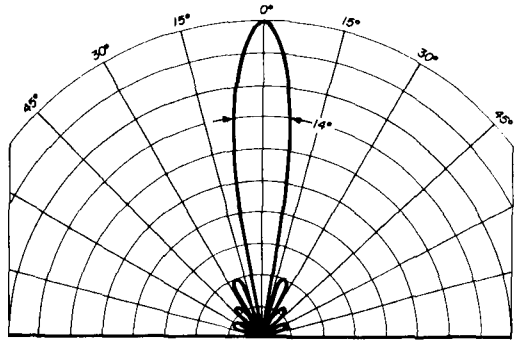

fig. 5. Typical diffraction patterns.
(A) Uniformly illuminated aperture four wavelengths in diameter (above). (B) The same pattern, but assuming a rear aperture of the same size attenuated 20 dB.

hence the larger the aperture, the closer the nulls will be. That is, the larger the antenna, the narrower will be the beam.

fig. 4. Diagram for the calculation of diffraction patterns in the general case.

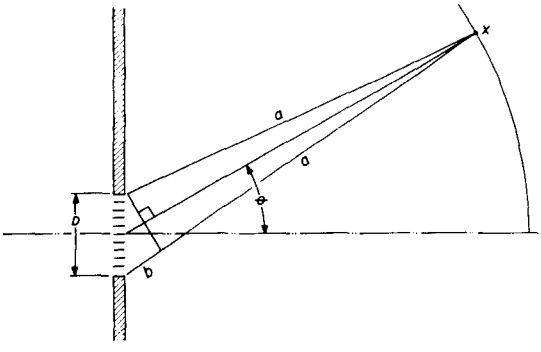

stacking

Only one aperture dimension was taken into account in the preceding derivation. As a result the derived pattern is for only one plane. The horizontal and vertical patterns are functions of the aperture horizontal and vertical lengths. Hence the two patterns are independent. What happens if a Yagi system is stacked?

Two Yagis stacked one above the other have a vertical beam twice as narrow as a single Yagi. The opposite is true for side-by-side stacking. Four antennas in an H-array would have one-half the beam-width in both planes, and so forth.

In the same way the main lobe is modified by changes in the aperture shape, sig-

nificant effects are produced in the side lobes. As the main beam is compressed by stacking, the side lobe's locations are altered. Old side lobes will disappear and new ones will appear elsewhere. While the angular beam dimensions on the horizontal and vertical axes are independent, off the axes they are not. That is, both the main beam and side lobes off the two main axes are dependent on other dimensions of the aperture.

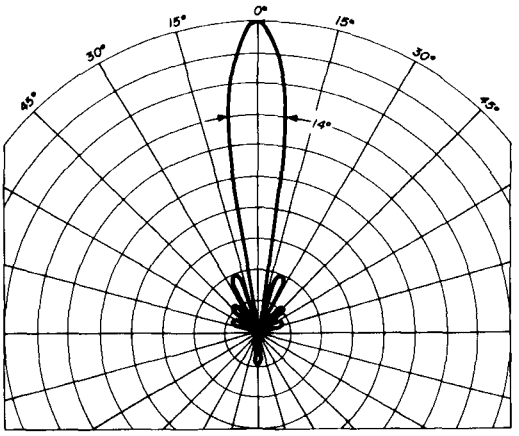

fig. 5B.

transmitting and receiving antenna gain

I showed previously that receiving antenna gain is a function of capture area. Transmitting antenna gain is a function of antenna beamwidth. The smaller the beam, the greater will be the forward field. All this boils down to a simple fact: transmitting antenna gain is directly proportional to capture area, as is receiving antenna gain. There is nothing new about this. Way back in 1929 the relationship between antennas as receivers and transmitters of electromagnetic energy was precisely stated in the ***reciprocity theorem,***[3] which is valid for any antenna. This merely says that any antenna that has gain as a receiving antenna will have the same gain as a transmitting antenna, **providing** the nature of the wave remains unchanged as it propagates between receiving and transmitting antennas.

the dipole

How does this simple antenna generate its capture area? The answer is not obvious. In some respects, the dipole is almost too simple to use the concept of an aperture. The main problem in trying to identify its shape is that in one plane its pattern is omnidirectional. If you insist, an aperture in the shape of a cylindrical sheet wrapped around the dipole might suffice, but this is at variance with the flat-surface concept used in the more sophisticated cases. In most arrays of interest, the flat aperture is a good approximation of reality.

back lobes

When back lobes appear, it is because the antenna has a radiating aperture to the rear as well as to the front. A colinear array without reflectors, for example, will radiate equally well in both directions. The forward and rear field patterns will be identical. A reflector will attenuate rearward radiation by its shielding effect, **fig. 5B.** It is possible in some cases to eliminate sidelobes entirely.[4]

conclusions

I have shown that an antenna has the same pattern whether used as a transmitting or receiving antenna. I have also made some simplifications to explain the basic principles without rigorous mathematical treatment. If you are interested in pursuing the extensions of the analysis of the two-dimensional aperture approach, a detailed discussion is given in reference 5.

The next time you become involved in a heated discussion on antennas, you'll now have some ammunition when statements such as those at the beginning of the article are made.

references

1. Jim Kennedy, K6MIO, "Illumination and Parabolic Antenna Design," *73 Magazine*, December, 1966, p. 90.
2. F. A. Jenkins and H. E. White, "Fundamentals of Optics," McGraw-Hill, New York, Chap. 15.
3. R. Carson, "Reciprocal Theorem in Radio Communications," *Proc. I.R.E.*, June, 1929, Vol. 17, p. 952.
4. J. D. Kraus, "Antennas," McGraw-Hill, New York, 1950, p. 93.
5. A. Z. Fradin, "Microwave Antennas," Pergamon Press, Long Island, New York, 1961, Chap. 3.

ham radio

increased sideband suppression for the HT-37

Easy conversion to a filter-type sideband generator

Milton L. Pokress, W3CM, 68 Sheridan Street, N.E., Washington, D. C. 20011

If you're an owner of a Hallicrafters HT-37 ssb transmitter, I'm sure you'll agree it has many excellent features. One area where it could be improved is in its sideband generator. The HT-37 uses the phase-shift system. It's difficult to obtain really good attenuation of the unwanted sideband with this method. The phase-shift networks are tricky to adjust and to keep adjusted. The unwanted sideband in most phasing systems is down about 30 dB, while 45 to 55 dB is not uncommon for filter systems.

The HT-37 can be modified to use a filter system for about $35.00. You should have no trouble adapting the circuit to the filter system described in the following paragraphs. You'll need the parts in **table 1.**

filter selection

After examining many available filters, I chose the McCoy Silver Sentinel. I paid

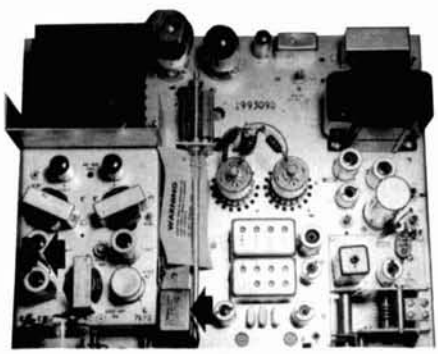

Top of the modified HT-37 chassis. Left arrow shows position of extension shaft coming up between tubes V1 and V2. Knob is shown for illustration and is installed after top cover is in place. Filter (right arrow) is mounted on a bracket and attached to one of the holes that hold the subassembly in place.

$32.95 for mine direct from the manufacturer.* Its features are listed in **table 2.** I chose this filter because its input impedance closely matched that of the circuit and didn't require any matching network. Also, its low insertion loss eliminates the need for an amplifier ahead of the mixer.

installing the filter

A check of your HT-37 schematic will show that the carrier oscillator is one-half of a 12AT7 (V2B). If you look at the top of the chassis you'll see this tube, the audio stages,

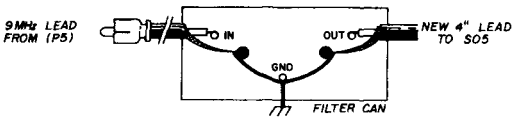

fig. 1. Underside of filter. A phono jack is soldered to the IN pin and a 4" piece of shielded lead soldered to the OUT pin with a new phono plug as shown.

balanced modulator and phasing network on a subassembly located on the left-hand side.

A shielded lead (P5) comes out of the front top of the subassembly chassis and goes to a phono jack (SO5) on top of the main chassis near the long shaft that turns the driver tuning capacitor. Pull P5 lead out and wire in the filter as shown in **fig. 1.**

* McCoy Electronics Co., Mt. Holly Springs, Pennsylvania 17065; price includes two sideband crystals. Suitable 9-MHz crystal filters are also available from Spectrum International, Box 87, Topsfield, Massachusetts 01983. The XF-9A filter, at $19.95 is a 5-pole unit; the XF-9B, an 8-pole filter (better shape factor), is $27.50; matching sideband crystals are $2.50 each.

Table I. Parts list for the HT-37 modification.

quantity	part
1	3-position rotary switch and pointer knob
1	aluminum stock for switch bracket
1	bracket for filter mount (see photo)
1	1/4- to 1/4-inch shaft coupler
1	1/4-inch shaft extension (see text)
1	McCoy crystal filter (see text)
2	25-pF trimmers
2	crystal sockets
1	phono slug and jack

crystal switching

Before starting to work on the underside of the chassis, pull out Z1, the 90-degree phase-shift network located next to T101. It's in an octal socket and comes out just like a tube. Short pins 2 and 3, and 1 and 6 with bare hook-up wire as shown in **fig. 2A,** then plug it back in. The audio phasing network is now disabled.

On the underside of the subassembly chassis, modify the carrier oscillator circuit as shown in **fig. 3.** Break the lead at point X and wire it to the pole of a 3-position rotary switch. Mount the switch on a bracket close to the grid of V2B.

Drill a hole large enough to pass the shaft of the rotary switch exactly between the center of V1 and V2. Extend the switch shaft with a coupler and a brass or aluminum extension shaft. Make the extension long enough so about one-half inch will fit through the cover of the transmitter when it is back on. File or turn down the diameter of the top end of this shaft sufficiently so it will

fig. 2. New connections to the phase-shift network are shown in A. Crystal switch bracket is shown in B.

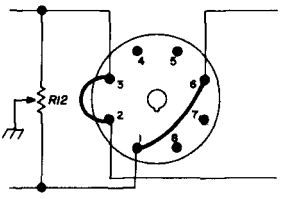

A

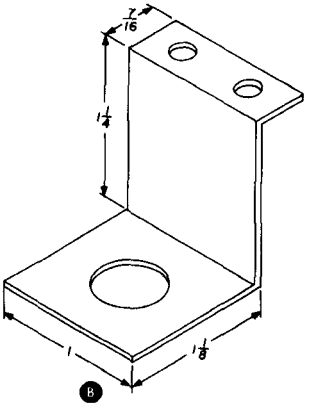

B

fit through one of the large perforations on the top cover. The knob, of course, will be put on after the cover is in place.

With the wiring completed and the two new crystals installed, your switch should select the 8998.5-kHz crystal, 9-MHz crystal, and 9001.5-kHz crystal in that order. Now, snip L102 lead where it connects to C116; also snip RFOC capacitor lead where it connects to C117. These are green wires. The modification is now complete. The phasing networks are disconnected, and the filter, with its corresponding crystals to produce upper or lower sideband, is ready for tune-up.

Since the frequency of the 9-MHz crystal falls right in the center of the filter passband,

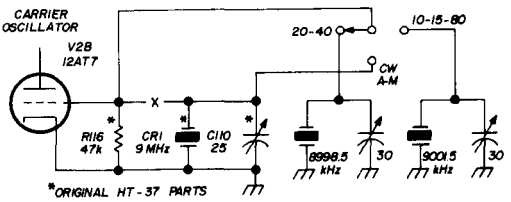

fig. 3. Modification to the carrier oscillator circuit. The lead from the grid is broken at x and connected to the arm of the three-position switch. The 9-MHz crystal and its associated trimmer are part of the original HT-37.

cw and a-m operation is undisturbed. When you operate in these modes, the new switch must be in the 9-MHz position. The upper and lower sideband positions on the main function switch on the front panel are inoperative, and either upper or lower sideband is selected by the new switch. However, the function switch must be left on upper or lower sideband simply to get it off the cw or a-m positions when operating sideband.

Table 2. McCoy ssb filter characteristics.

center frequency (MHz)	**9.0**
bandwidth (Hz)	**2360**
shape factor	**2**
sideband attenuation (dB)	**45**
insertion loss (dB)	**2.3**
input impedance (ohms)	**660**
crystal frequencies (kHz)	**8998.5 and 9001.5**

adjusting the filter slope

The manufacturer advises that the frequency of the 8998.5 and 9001.5-kHz crystals should be adjusted to fall 20 dB down the slopes of the filter. In selecting these points, the filter will work at its optimum design characteristics, pass the desired sideband fully, and suppress the unwanted sideband

fig. 4. Characteristic curve of the McCoy 9-MHz crystal filter.

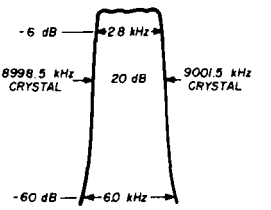

most effectively. **Fig. 4** shows what the characteristic curve looks like and will give you an idea how we will find the 20-dB point on the filter slope. You don't need any fancy instruments, but you must have a vtvm with an rf probe.

After a 30-minute warm up, tune up the transmitter at 3800 kHz using the 9-MHz crystal for maximum output into a dummy load. Rebalance for maximum carrier suppression. Set your vtvm on the 100-volt scale and for minus dc. Connect your rf probe with an alligator clip to the transmitter's antenna output terminal inside the chassis. Ground the ground lead of your probe to the chassis. Select the 8998.5-kHz crystal, set the function switch on either upper or lower sideband, and set the audio control to zero. Turn the operation switch to MOX and unbalance the left carrier balance control, and at the same time, using an insulated tool, (this is essential) turn the trimmer capacitor corresponding to the 8998.5-kHz crystal for maximum output on the vtvm.

You will note, as you change the frequency by turning the trimmer, the reading will go up then level off. What is happening is that at the maximum reading, you had the crystal frequency on the top of the filter as shown in **fig. 4.** Note your maximum read-

Table 3. Crystal selection for desired sideband.

amateur band	sideband	crystal (kHz)
10 & 15	upper	9001.5
20	upper	8998.5
40	lower	8998.5
80	lower	9001.5

ing—mine read 65 volts. Whatever your maximum reading is, you must back it off to read only 10 percent of this. In my case, since 65 volts was maximum, I backed it down to 6.5 volts (change your vtvm scale for accuracy when you get the reading low

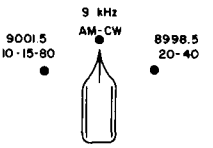

fig. 5. Label switch as shown. With this arrangement, lower sideband is selected for 40 and 80 meters and upper sideband for 10, 15 and 20.

enough). You are now 20 dB down the slope of the filter. Repeat this procedure with the 9001.5-kHz crystal. Now switch to the 9-MHz crystal and rebalance the carrier for maximum suppression. You will note that when you switch to either of the two sideband crystals, carrier suppression will be even better.

selecting the proper sideband

A process of up conversion and/or down conversion is used in the HT-37 to arrive at the operating frequency on the various ham bands. **Table 3** will assist you in selecting the proper crystal to operate on the customary sideband. Label your new selector switch as shown in **fig. 5** to correspond to the sideband used on a particular band.

No provision has been made to compensate the vfo automatically for the difference in frequency between the upper- and lower-frequency crystals if you were to switch from upper to lower sideband or vice versa on any one band. It would get rather complicated on this transmitter as the vfo frequency would have to be increased on some bands and decreased on others. It's not worth the trouble since one doesn't keep switching sidebands when working on a particular band. If you wish to change sidebands during a contact, you can shift the main tuning manually to remain on the same frequency.

Before putting the top cover back on, bracket the filter to one of the existing threaded holes that holds the subassembly shield in place as shown in the photo. In this position the filter is in the clear and away from any heat generated by the tubes.

final checks

As a final check, try contacting some of your local buddies and ask them to check your quality and sideband suppression. Your unwanted sideband suppression should be at least 45 dB down. They may say your voice sounds a little different. The filter is quite sharp, and the voice frequencies passing through the filter bandpass will account for the difference. In any event you should now have a cleaner, sharper signal with practically all your power concentrated in the wanted sideband.

A word of caution—the HT-37 always had plenty of audio drive; now you have a bit more. It's very easy to flat top, and one of your best investments would be a monitor scope, if you don't already have one, so you can adjust your drive "right on the nose."

Congratulations—you are now the owner of a solidly built, modern filter-type single sideband transmitter.

ham radio

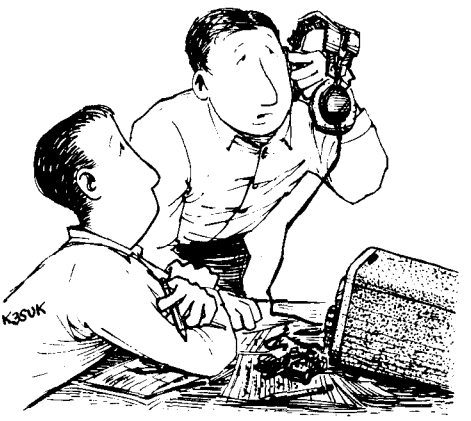

"No wonder you're having trouble with the code—that's RTTY!"

The "Saucer Sled" antenna is being bore-sighted by K6HIJ on a home-brew antenna range. W6DSL and WA6HWV look on.

a low-cost amateur microwave antenna

Richard B. Kolbly, K6HIJ, 26335 Community Boulevard, Barstow, California 92311

One of the major problems with putting an amateur microwave station together is obtaining a suitable antenna. For work above 2300 MHz, amateurs have traditionally used parabolic reflectors which they have either located on the surplus market or built themselves. It takes a fair amount of luck to find a surplus dish at a reasonable price, even if one is fortunate enough to live in an area that has a number of surplus dealers. Making your own dish is anything but easy, especially if you want it to be effective at 10,000 MHz.

raw materials

In the 1968 Sears Christmas catalogue I noticed a "Saucer Sled."* It was 26 inches in diameter and made of "sturdy aluminum." It looked like a natural for a dish, and in the interest of science, one was ordered. When it arrived, inspection showed it was spherical, with a usable surface 24 inches in diameter. It was indeed well built, and would make an excellent antenna for amateur microwave work.

The focal length was measured by focusing the sun's rays on a card (**DON'T** try using your hand as a focal plane!) and was approximately 15½ inches. Since this corresponds to a f/d ratio of 0.65, instead of 0.4 for a typical parabolic reflector, a standard open-end waveguide feed such as a polaplexer[1] will not properly illuminate the reflector surface.

construction

A conical horn feed was designed from the literature[2] that would have the proper beamwidths to illuminate the "Saucer Sled"

fig. 1. Feed system dimensions at 3300 MHz for the "Saucer Sled" antenna. The polaplexer is a half-quart empty beer can.

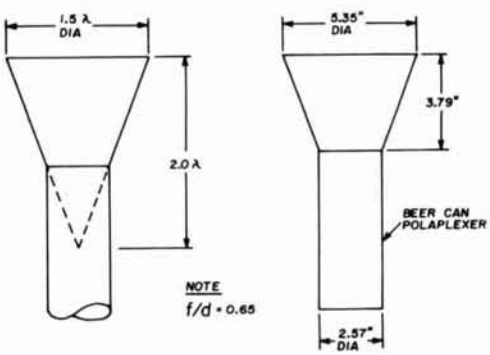

effectively. The feed was constructed with flashing copper attached to a homemade polaplexer (**fig. 1**) for the 3300-MHz band. The horn alone will produce a gain of 12 dB over an isotropic source.

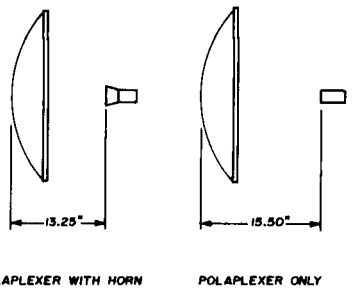

fig. 2. Measured feed locations for best gain.

The gain of the antenna, measured at 3335 MHz, was 24 dB (within the accuracy of measurement). If the reflector is illuminated with a simple polaplexer instead of the horn, the gain will be 1 dB less. These values agree closely with theory and are well within the errors of measurement. **Fig. 2** gives the location of the feed for best focus in both cases.

* This "Saucer Sled' microwave antenna is a simple and effective solution to the antenna problem for microwave work. I hope this will eliminate one stumbling block for the amateur who wants to experiment with microwave communications. I'd like to thank W6DSL and WA6HWV for their help in evaluating the performance of this antenna.

You should check the focal length of your own "Saucer Sled," as my measurements were made with only one sample, and I don't know how closely the dimensions are controlled during manufacture. If you can find a store that stocks these "Saucer Sleds," select one with a minimum of dents. Mine arrived with some dents that probably occured during shipping. Unless the dents are quite severe, however, they should not appreciably affect performance.

the mount

A suggested mounting method is given in **fig. 3,** but feel free to use your own ideas. Bear in mind there should be no relative movement between reflector and feed, nor between antenna and mount. Be sure to allow for focusing adjustments and elevation angle, because this antenna has a narrow beamwidth: about 10 degrees at 3300 MHz. The beamwidth is proportional to frequency (i.e., about 3 degrees at 10,000 MHz.) The feed should have a total of two wavelengths (approximately) of travel around the measured focal point along the antenna axis. This is 6 inches or so at 3300 MHz.

references

1. K. E. Peterson, K3KRU, "Practical Gear for Amateur Microwave Communications," *QST*, June, 1963, pp. 17-20.
2. G. C. Southworth, "Principles and Applications of Waveguide Transmission," Van Nostrand, 1950, pp. 415-9.

ham radio

fig. 3. A suggested scheme for mounting. Rigidity is important because of the narrow beamwidth.

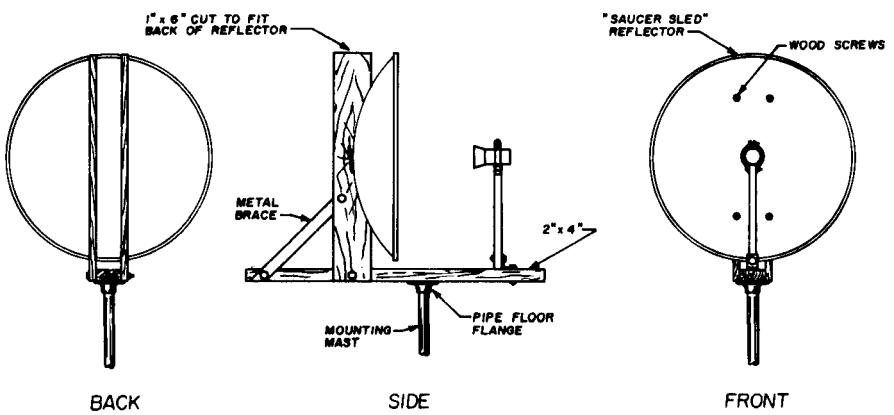

a tone-modulated signal generator for two and six meters

Eliminate the guesswork in alignment problems with this compact vhf signal source

Vernon Fitzpatrick, WA8OIK, McLain Park, M 203, Hancock, Michigan 49930

After several years of trying to align home-built vhf converters and converted surplus equipment using harmonics from a cheap kit-type signal generator, I decided it was time for a change. Commercially built and surplus vhf generators were beyond my budget. I had thought seriously about building an 8-MHz harmonic generator, but the problem with these is knowing for sure you're aligning on the correct harmonic.

I started the project described here with the idea of building a temporary signal source for two meters. I ordered an OX-H oscillator kit with an EX crystal ground for 48.000 MHz.* The crystal's third harmonic was to provide the two-meter output.

The oscillator was much better than I expected. It has a range of 45 to 60 MHz without retuning. The specification sheet with the OX-H oscillator kit stated that an AOS-A1 audio oscillator could be used to tone-modulate the crystal oscillator. So, here were the major elements for a stable, accurate, modulated signal generator. I then ordered the audio oscillator, and the temporary signal source evolved into a permanent item of

test equipment with all the features I needed (see **fig. 1**). A crystal switch would provide signals for six and two meters without retuning the oscillator. The crystal frequency could be used for 50 to 54 MHz, and the third harmonic of crystals in the 48.000 to 49.000 to 49.333 MHz range could be used for output on 144 to 148 MHz.

I have six marker frequencies and can add five more. Most two-meter activity is on the low end of the band, so I have more marker signals in this region. For two meters, my marker signals are 144, 145, 146, and 148 MHz. I also plan to get on six meters, so my signal generator has outputs on 50 and 51 MHz.

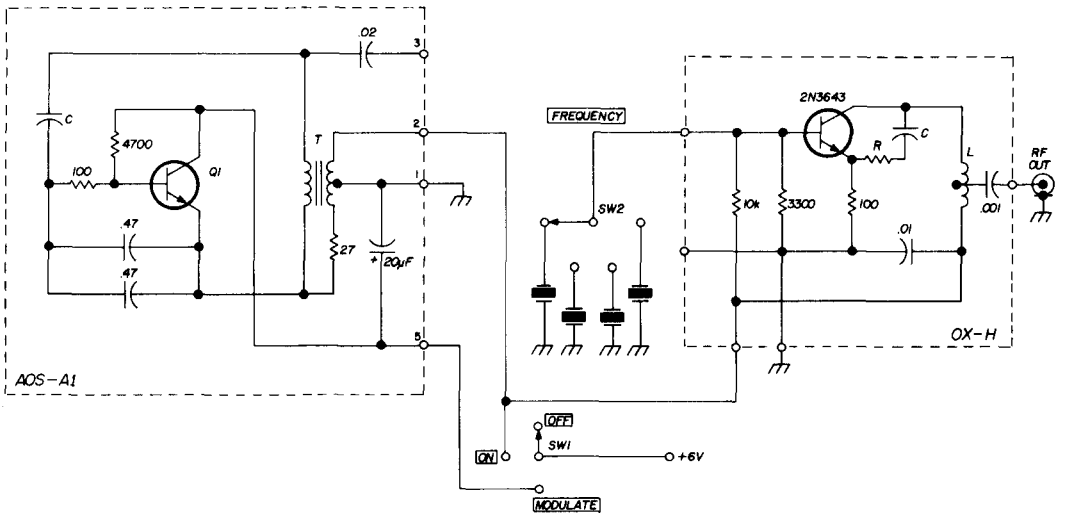

fig. 1. Schematic for the vhf signal generator. Four crystals are shown; up to eleven can be used.

construction

I used a Bud CU-463 cabinet, because I happened to have one in the junkbox. However, the chassis will fit into a 6x6x6-inch cabinet; for ease of inserting crystals, I recommend the latter.

Assemble the OX-H oscillator according to the instructions with the kit. Touch-solder the crystal socket so it can be removed after testing. Check out the oscillator by listening for the signal in a receiver. When the oscillator is working properly, remove and discard the crystal socket. Set the oscillator aside for the time being.

The AOS-A1 audio oscillator has one mounting hole at the rear. The audio oscillator must be insulated from the chassis. Use a sharp knife to remove the copper foil for approximately 1/8 inch around the mounting hole. To provide two-hole mounting, I drilled a 9/64-inch hole in the clear area behind terminal 6. This completes the preparation of the modulator assembly.

crystal switch

A Centralab PA1001 phenolic switch was used for the crystal switch assembly. The phenolic switch has a shorter and more direct path than ceramic switches.

Prepare the crystal sockets by bending one terminal out. Solder the bent terminals directly to the switch terminals. Crystal sockets 1, 5 and 6 should be almost vertical. If eleven sockets will be used don't solder sockets 10 and 11 until the audio oscillator is mounted on the chassis. Posi-

* International Crystal Mfg. Co., Inc., 10 North Lee, Oklahoma City, Oklahoma 73102. (OX-H kit, $2.95 ppd. EX crystals, $3.95 each ppd. AC-5 crystal socket $.15 each, shipping weight 2 ounces. AOS-A1 transistor audio oscillator, $9.95, shipping weight 2 pounds.)

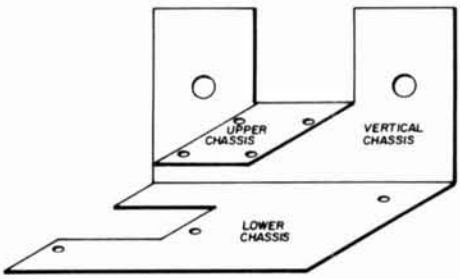

fig. 2. Layout for the chassis. A piece of aluminum is used, measuring 4¾ by 6 inches.

tion crystals 10 and 11 so they'll clear the AOS board. Remove stop tabs on the switch to correspond with the number of crystal sockets used.

Make a 1-3/8-inch diameter circle of number 16 bare or tinned copper wire, and leave a 1-inch pigtail. Place the wire circle behind the crystal switch so the pigtail is lined up with the switch center contact terminal. Solder the ground terminals of the crystal sockets to the wire circle, then solder a 1-inch pigtail of number 16 wire to the switch center contact. Set the switch assembly aside.

the chassis

Lay out the chassis on a 4-3/4x6-inch piece of aluminum in accordance with the dimensions given in **fig. 2.** Bend the bottom chassis back. Position the audio oscillator with terminals flush with the left (from the front) edge and centered from front to rear, then mark and drill the mounting holes with a 9/64-inch drill.

Bend back the upper chassis, and drill four 9/64-inch holes for the rf oscillator. (The rf oscillator will be positioned flush

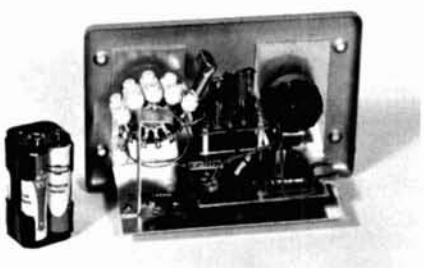

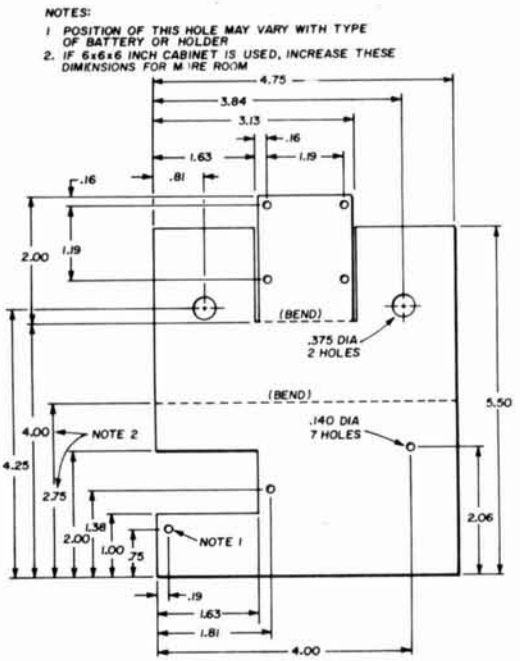

with the rear of the chassis.) Next, drill the two switch holes on the vertical chassis. The cabinet front panel is drilled to correspond with the switch holes in the vertical chassis. Depending on the type of jack you use, drill the rf output jack hole between the switch holes, from ¼ to ½ inch above. Be sure the jack clears the rf chassis.

final assembly

Begin assembly by mounting the rf jack on the cabinet front. Mount the rf oscillator on the chassis, using the mounting hardware supplied with the kit. Be sure the rf terminals are to the front. Secure the chassis to the front panel with the switches. Pass the switch through the chassis hole, then through the front panel hole, and tighten the mounting nut. Mount the crystal switch so the pigtails are as close as possible to the crystal holes in the OX board. Pass the wires through the holes, cut off excess, and solder.

The function switch (SW 1 in **fig. 1**) carries only dc, so any three-position switch can be used. Using the terminals supplied with the OX kit, wire the rf and ground to the rf output jack. Mount the AOS board

table 1. Specifications for the vhf signal generator.

frequency range	45 to 60 MHz and harmonics
frequency tolerance	0.02 percent of crystal frequency
operation temperature range	0 to 50 degrees centigrade
rf output at crystal frequency	0.2 V rms into 50-ohm load
modulation frequency	1000 Hz ±10 percent
audio distortion	less than 15 percent
power requirements	6 Vdc unmodulated at 20 mA; modulated, 70 mA

using two 3/8-inch long insulated spacers. Connect the battery positive lead to the rotary terminal of the function switch. Connect a wire from number 2 terminal of the function switch to the 6 V terminal on the OX board. Connect another wire from the number 2 terminal on the function switch to terminal 2 on the AOS board. Connect a wire from terminal 3 on function switch to terminal 5 on the AOS board.

If a small six-volt battery or a holder with four pen cells is used for power, these can be mounted on the right rear corner of the lower chassis. Make a strip clamp, or bolt the holder directly to the chassis. This completes construction of the signal generator.

supplementary data

Specifications of the vhf signal generator, from the International Crystal Mfg. Co. specification sheet, are presented in **table 1.** The literature supplied with the OX kit shows several rf coupling circuits. I use a 7-inch length of insulated number 18 wire in a phono plug for a vertical whip antenna. Good marker signals are received through the station antenna with this arrangement. You can also use a loop on the rf output to calibrate a grid-dip oscillator at the oscillator crystal frequency.

Interesting articles on the OX oscillator and EX crystals appear in reference.

references

1. Don Nelson, WB2EGZ, "A Look at the EX Crystal and Its Oscillator," *ham radio*, April, 1968, p. 60.
2. Howard S. Pyle, W7OE, "Mini-spotter Frequency Checker," *ham radio*, May, 1969, p. 48.

ham radio

NOISE BLANKER
FOR THE SWAN 250

The TNB-250 Noise Blanker effectively suppresses noise generated by auto ignitions, appliances, power lines, etc., permitting the recovery of weak DX and scatter signals normally lost in noise.

Features include modern solid state design techniques utilizing dual-gate MOS FET transistors and two stages of IF noise clipping for the efficient removal of impulse noise at the transceiver IF frequency. The use of MOS FETs and a special gain controlled amplifier circuit provide excellent cross-modulation characteristics in strong signal locations.

TNB-250 shown installed on a Swan 250 at accessory socket location.

Simplified installation requires twenty minutes.

TNB-250 **$29.95 ppd.**

TNB-250C (for Swan 250C) **$32.95 ppd.**

Model TNB Noise Blanker, designed to operate with VHF converters by connecting in the coax between converter and receiver.

Choice of 14-20, 100-140, or 125-160 VDC, RCA phono or BNC connectors. Specify for 10 or 20 meter converter output.

Model TNB **$29.95 ppd.**

(For special frequencies add $3.00)

Refer to the New Products column of the August '68 issue of Ham Radio Magazine for additional information on the TNB Noise Blanker or write for technical brochure.

Prepaid orders shipped postpaid. (For Air Mail add $.80) C.O.D. orders accepted with $5.00 deposit. California residents add sales tax.

All products are warranted for one year and offered on a satisfaction guaranteed or return basis.

WESTCOM
ENGINEERING COMPANY

P. O. Box 1504 San Diego, Cal. 92112

TOP OF THE YAESU LINE

THE FT DX 400 TRANSCEIVER

Conservatively rated at 500 watts PEP on all bands 80 through 10 the FT dx 400 combines high power with the hottest receiving section of any transceiver available today. In a few short months the Yaesu FT dx 400 has become the pace setter in the amateur field.

FEATURES: Built-in power supply • Built-in VOX • Built-in dual calibrators (25 and 100 KHz) • Built-in Clarifier (off-set tuning) • All crystals furnished 80 through the complete 10 meter band • Provision for 4 crystal-controlled channels within the amateur bands • Provision for 3 additional receive bands • Break-in CW with sidetone • Automatic dual acting noise limiter • and a sharp 2.3 KHz Crystal lattice filter with an optimum SSB shape factor of 1.66 to 1.

Design features include double conversion system for both transmit and receive functions resulting in, drift free operation, high sensitivity and image rejection • Switch selected metering • The FT dx 400 utilizes 18 tubes and 42 silicon semi-conductors in hybrid circuits designed to optimize the natural advantages of both tubes and transistors • Planetary gear tuning dial cover 500 KHz in 1 KHz increments • Glass-epoxy circuit boards • Final amplifier uses the popular 6KD6 tubes.

This imported desk top transceiver is beautifully styled with non-specular chrome front panel, back lighted dials, and heavy steel cabinet finished in functional blue-gray. The low cost, matching SP-400 Speaker is all that is needed to complete that professional station look.

SPECIFICATIONS: **Maximum input:** 500 W PEP SSB, 440 W CW, 125 W AM. **Sensitivity:** 0.5 uv, S/N 20 db. **Selectivity:** 2.3 KHz (6 db down), 3.7 KHz (55 db down). **Carrier suppression:** more than 40 db down. **Sideband suppression:** more than 50 db down at 1 KHz. **Frequency range:** 3.5 to 4, 7 to 7.5, 14 to 14.5, 21 to 21.5, 28 to 30 (megahertz). **Frequency stability:** Less than 100 Hz drift in any 30 minute period after warm up.

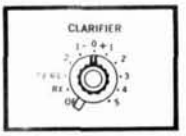

CLARIFIER CONTROL — Does the work of an external VFO — allows operator to vary receive frequency 10KHZ from transmit frequency, or may be used as an extra VFO combining transmit and receive functions.

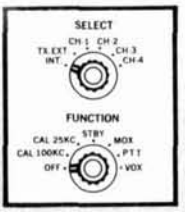

SELECT CONTROL — Offers option of internal or outboard VFO and crystal positions for convenient preset channel operation.

FUNCTION CONTROL—Selects crystal calibration marker frequency and desired transmit mode of operation.

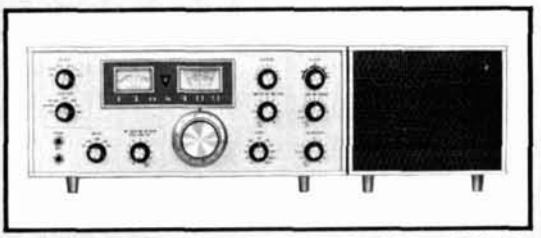

FT DX 400 $599.95 — SP-400 $14.95

SPECTRONICS BOX 356, LOS ALAMITOS, CALIFORNIA 90720

— PROFESSIONAL EQUIPMENT FOR THE AMATEUR —

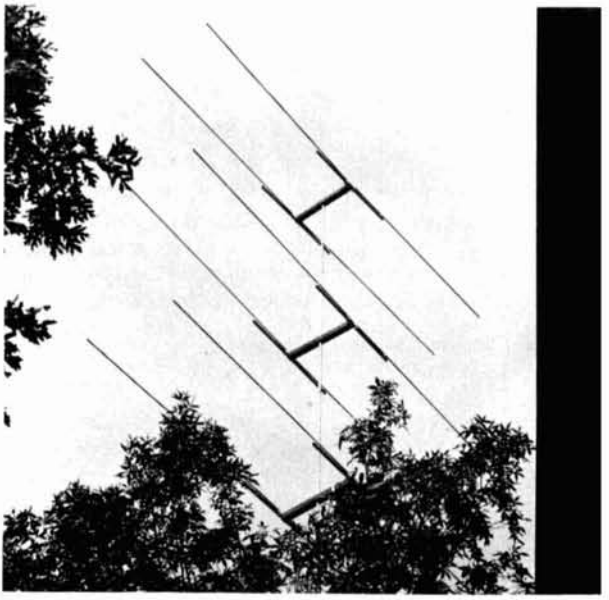

big beam for six meters

Practical construction details of a 12-element collinear array for high performance on 50 MHz

John Stanley, K4ERO, 1501 Robin Road, Maryville, Tennessee

With more and more people getting on vhf in a serious way, vhf antennas have become a lively topic of conversation. One antenna that has always been popular with the 2-meter-and-up enthusiasts is the collinear; this is not without reason.

The collinear doesn't have quite as much gain, element for element, as a Yagi but it has two important advantages: low-Q operation and broad radiation pattern. The low-Q feature means that you can move over large parts of a band without fear of high swr. The broad radiation pattern means that aiming is not as critical; with high gain arrays this is a real advantage.

Although collinears are very popular on 144, 220 and 432 MHz, very few seem to be used on six meters. This is unfortunate because a rotatable eight-, twelve- or sixteen-element collinear for six meters offers one more advantage; it's easy to assemble up on

top of the tower. Since no part of the antenna has to be more than an arm's length from the tower itself, you don't have to balance a 20-foot boom or try to wrestle 50 pounds of aluminum tubing up through a maze of guy wires.

six-meter collinear

I hit upon the idea of a collinear for six when I was contemplating what kind of antenna I could put on my own 50-foot tower —a handy hickory tree. Obviously a long Yagi was out of the question. If I built it on

The 12-element collinear beam uses a handy hickory tree for support.

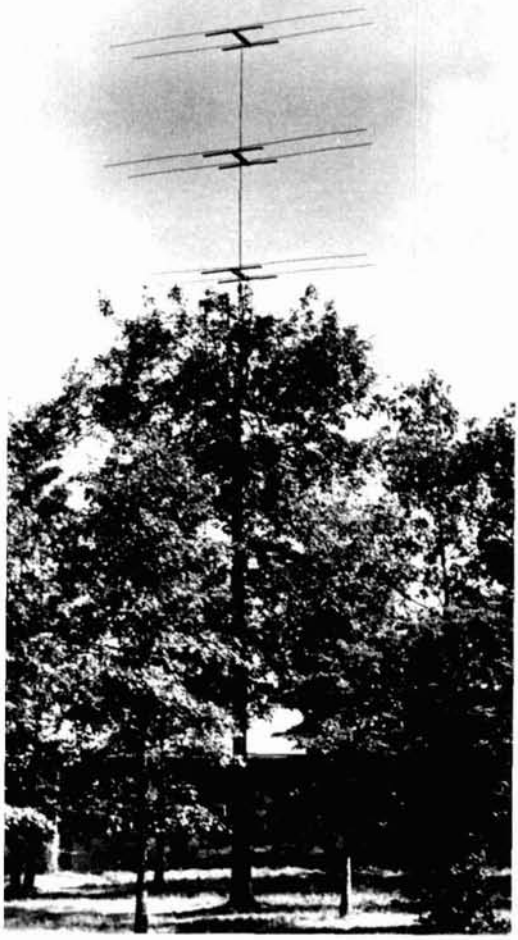

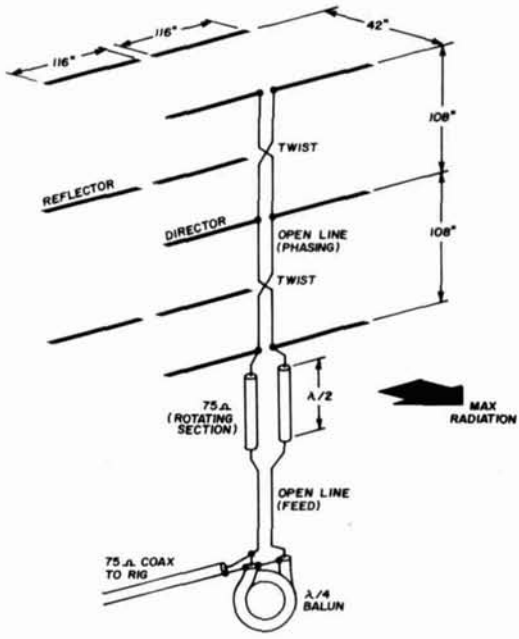

fig. 1. Electrical construction of the 12-element collinear for 6 meters.

the ground, I would never get it up through the branches, and I wasn't about to climb hand-over-hand out on the boom to fasten on the elements while floating between heaven and earth.

With a collinear I could build each bay at tree top level without leaving the security of the hickory trunk, then raise each bay in turn by running the pipe mast up nine feet, and build the next bay. It was a snap. With a minimum of danger, work and investment, I had the most exciting six-meter beam I have ever used.

I am not going to give you all the mechanical details because the average ham should be able to equal my design or improve upon it.

construction

The booms are made of redwood, the elements are electrical conduit, and the insulators are ceramic rods and standoffs I picked up locally. Plexiglass is an excellent substitute for the insulators, aluminum would result in much lighter (and more expensive) elements, and oak might make more rigid

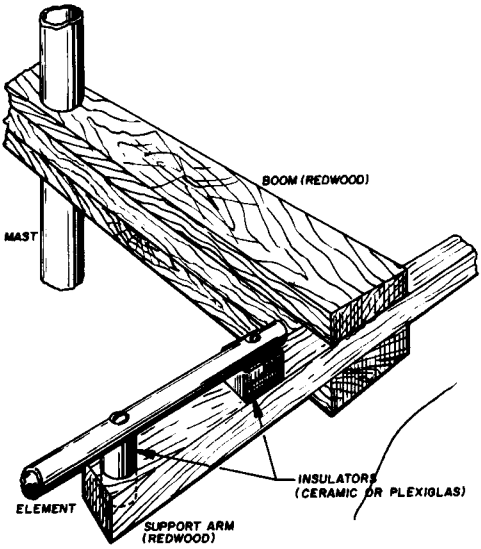

fig. 2. Mechanical construction used by K4ERO uses electrical-conduit elements, surplus insulators and redwood booms and support arms.

booms. I built my beam for under twenty dollars, and it has been up for more than a year.

Each driven element is 110 inches long and each reflector, 116 inches. The booms are 3½ feet long and stacked 9 feet apart (see **fig. 1**). The balanced phasing sections and balanced feedline are transformed to 75 ohms unbalanced through a balun. The rotating section consists of two half-wave sections of coax spliced into the open-wire line in the vicinity of the rotator.

results

The performance of this array has more than exceeded expectations. The beamwidth is about 60° at the 6-dB points, and the front-to-back ratio appears to be near 30 dB. The swr is less than 2:1 over the **entire** six-meter band; from 50 to 51 MHz, swr is negligible.

If there's a signal there, this antenna will capture it. I consistently work stations 300 to 400 miles away and can work over 200 miles anytime with 15 watts of single sideband. I have worked K4GXM (20 miles away) when he was running 1 mW of ssb to a 3-element beam. Scatter signals are very much in evidence on the low end of the band almost anytime, and if the band opens up suddenly, the wide beamwidth of this array means you are more likely to hear signals without careful aiming.

They say if your vhf beams stays up all winter, it's too small. On that basis I have decided that a 12-element collinear for 50 MHz isn't really a big beam—would anyone care to try 16?

ham radio

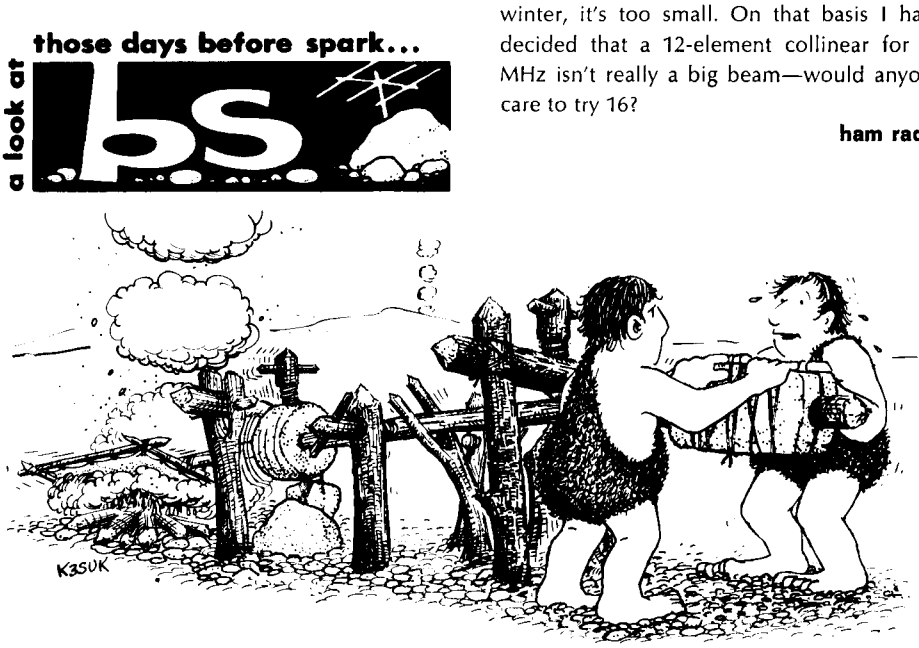

"How about you taking the "dah" side for awhile?"

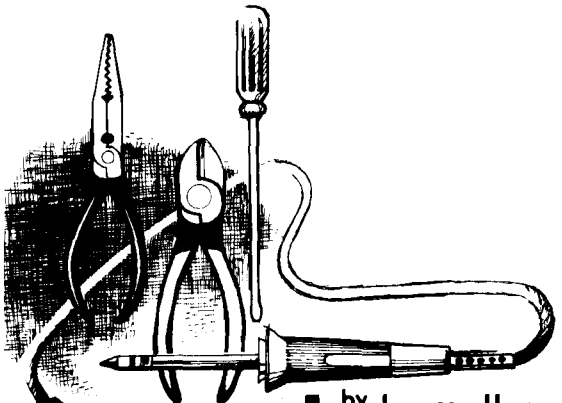

by larry allen

the repair bench

tuning up ssb transmitters

If you missed last month's repair bench I recommend you go back right now and read it. If you've forgotten what it said, review it briefly.

For the working methods I outline in the next few pages, I assume you know how the equipment works. The explanations are only detailed enough for clarity. If you don't understand ssb, you shouldn't try a full alignment job anyway. Likewise, manufacturers' instructions seem like Greek unless you know how ssb works. (Editor's note: An excellent explanation of single-sideband appears in a series of ssb articles beginning with March, 1968 **ham radio** and running through February, 1969.)

getting ready

Here are a few items you want to make sure are handy on your repair bench before you start an alignment job. You'll need a vtvm with an rf probe, rf signal generator, separate audio generator, oscilloscope, and alignment tools to fit the adjustment screws and transformer slugs.

Gather the equipment around you, on a cart or on the shelf of the bench. Get it turned on, warmed up, and checked out to make sure it works okay.

Warm up the transmitter, too. Heat up all the tubes, and key it briefly into the dummy load a few times. However, if you're aligning it from scratch, don't key it until certain things are checked.

My example is a triple-conversion transceiver—you don't see too many of them, but they're great for demonstration. Many of its stages and arrangements are typical of other brands and models. There's a block diagram of it in **fig. 1.** It's an SBE model SB-34. Many SB-34 stages do double duty—more than in most transceivers. For the most part, I'll be concentrating on the transmitter.

However, this double service brings up something important: align the receiver first, whenever you have a transceiver on the bench. Transmit operation may depend on proper alignment of receiver stages. If you always align the receiver before you go ahead with transmitter alignment, you'll save yourself some going back to do part of the job over.

Aligning the SB-34 receiver is the same as any triple-superhet. Just be sure you do it accurately. Later, transmitter alignment depends on how well you aligned certain mutual stages.

Presetting the operating (front panel) controls is an important first step. The manufacturer's booklet usually lists them. For the SB-34, be sure **pa tune** and **pa load** are fully counterclockwise (ccw). Turn **mike gain** R1 all the way down. The sideband switch goes at **usb.** The front-panel meter should be switched to read plate current of the final, the stage most likely to be damaged if tuning adjustments aren't carried out properly.

Internal adjustments to preset in the SB-34 are voltage regulator (not shown), final bias pot R81, neutralizing capacitor C86, and such. As I said, the manufacturer's alignment instructions list the preset controls and tell how to set them.

Certain voltage tests should often be made before the transmitter is keyed on for tuneup. Check plate and screen voltages on the finals and driver, the bias source for the finals, and any regulated voltages (the vfo B-plus supply is regulated in the SB-34).

Measure normal B-plus, with the unit on standby or in receive mode.

getting to work

Now for some alignment. Begin with the bandswitch set for the highest band, and the vfo at the high end of its dial. With no mike input and **mike gain** full ccw, adjust the bias two outputs as shown in **fig. 2.** Build the simple three-resistor isolation network.

Identify the frequency of the audio tone from your rf generator. Set the dial of the audio generator to furnish a signal about 1 kHz higher in frequency. Adjust the output controls of the two generators to supply the same level of signal.

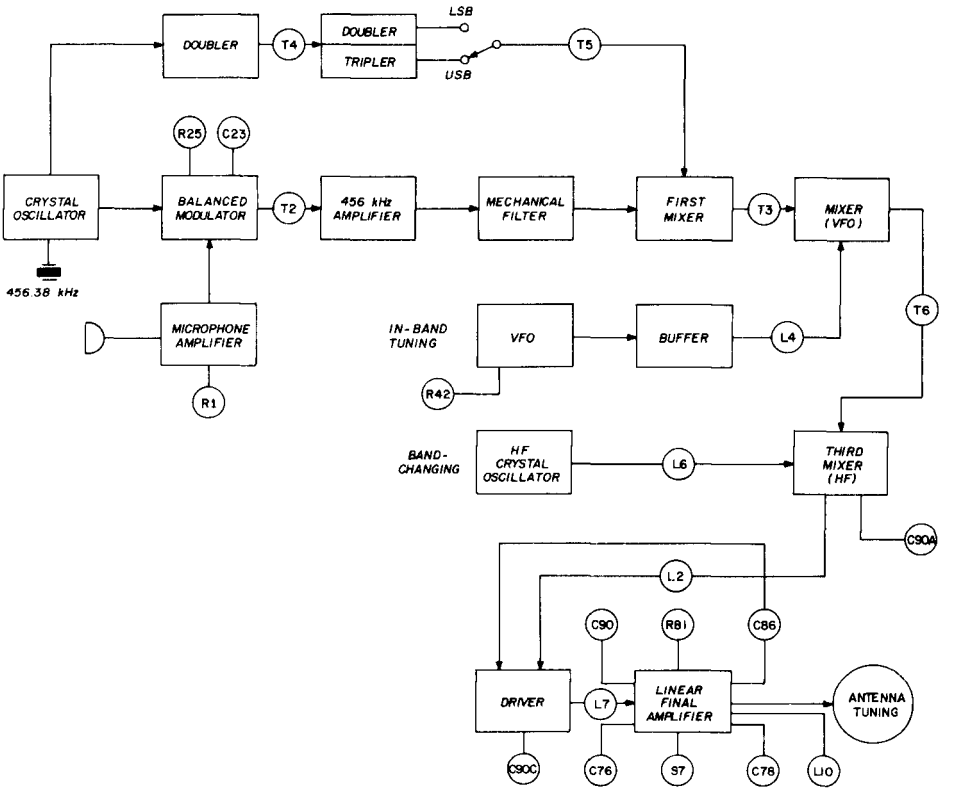

fig. 1. Abridged block diagram of SB-34 ssb transceiver. It is used as an example of how alignment is done.

pot for the finals so the plate-current meter on the front panel reads about 1.2 mA. Plate current in the finals with no modulation should be no more than 1.5 mA and no less than 1.0 mA.

Next job is to adjust the **pa tune** and the **pa load** knobs, which are operating (front panel) controls on the SB-34. This is done best with a two-tone signal going through the transmitter.

Use the audio generator and the audio signal from your rf signal generator. Mix the

Feed the two signals into the mike jack of the ssb transmitter. In the balanced modulator, they generate two sideband signals about 1 kHz apart. If the two tones are pure sine waves, with no significant harmonics, they produce in the transmitter two **rf** signals near the output frequency but 1 kHz apart.

An oscilloscope connected to the output of the transmitter displays the pattern in **fig. 3A.** The scope's sweep should be set to about 500 Hz, to lock in two full cycles of the beat note (which is somewhere near

1000 Hz). A scope connected across the dummy load is handy to watch for signs of instability during adjustment.

adjusting the final

With the two tones applied, turn **mike gain** up just enough to make a slight reading on the rf output meter. Adjust **pa tune** for a dip in the dc plate current meter on the front panel. Then, watching the rf output meter, adjust L7 and C90C for maximum rf output; they are driver tuning adjustments. Again dip the final plate current with **pa tune.**

A little at a time, turn **pa load** clockwise to increase rf output. After each increase, turn **pa tune** slightly counterclockwise and then clockwise till the deepest dip is obtained on the dc plate current meter.

As you advance the loading, watch the scope for signs of instability. You can also see them in erratic actions of the meters. Instability means you need to adjust neutralizing trimmer C86, which feeds back some rf signal to the driver.

It's even better to neutralize as you go along. After every couple of advances in loading, after you've re-dipped **pa tune,** touch up C86 so the dip on the dc plate meter coincides with the rf output peak on the output meter. That keeps the stage neutralized properly and prevents it breaking into oscillation at all.

Load the final until there is no further increase in rf output when you turn the **pa load** knob further clockwise. Then turn it back ccw just enough to reduce rf output noticeably. Re-dip the **pa tune** knob, check neutralization, and the linear final is tuned.

Caution: Never keep the transmitter keyed on more than a few seconds with the two tones applied. It's bad for the driver and final tubes.

Go back to the output of the last mixer. Adjust L2 and C90A for maximum rf output. Do the same again with L7 and C90C. (C90B —not shown—was adjusted during receiver alignment.)

for linear operation

Now is a good time to check linearity of the final, mixer, and driver stages. Turn up the mike gain until the sine waves on the scope begin flattening out on top like those in **fig. 3B.** With mike gain not quite making flat tops, recheck **pa tune,** neutralizing, and mixer and driver adjustments. Also make sure the **pa load** knob has a slight leeway to be

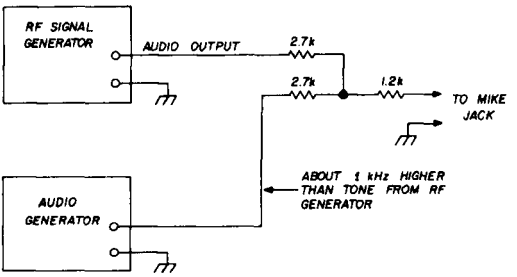

fig. 2. Build the mixing pad to keep the two generators isolated. Set their outputs for the same level; scope is a good indicator.

turned clockwise and still cause an increase in rf output. However, always leave it slightly ccw from maximum rf output.

Rf output from the SB-34 should be at least 50 watts (about 50 volts across a 50-ohm load) in this test. If, to get that much output, you have to advance **mike gain** so much that the sine waves are flattened out, there is nonlinearity in the transmitter. If not, go on to the voice test.

Disconnect the two-tone mixer resistors and plug the mike into its jack. At a normal voice level, say "a-a-a-h-h-h" into the mike. Turn up the mike gain until flat-topping is obvious in this new scope pattern. Back **mike gain** down enough to cure the flat tops and mark the position. That's the point of most linear operation. Rf output should be about 50 watts again.

Now turn the mike gain down completely. Turn **pa tune** clockwise to a peak on the output vtvm. Adjust 24-MHz trap coil L10 for minimum output reading. Turn up **mike gain** and re-dip **pa tune.**

balanced modulator

If you had any trouble with flat-topping before the rf output reached about half the unit's PEP output rating, something is amiss

in the transmitter. Most likely trouble spots are the balanced modulator and the linear final. Check the modulator first. The stage is shown in **fig. 4.**

Turn **mike gain** fully ccw. You want absolutely no modulation. First adjust the potentiometer for the least rf output across the dummy load. Then do the same with the capacitor. Both are labeled **carrier balance** in the diagram. In some transmitters one may be called **carrier null.**

Flip the **usb/lsb** switch back and forth. The rf output reading should be the same in either position, and very low—in the SB-34, only a fraction of a volt across the 50-ohm dummy load. If the reading changes as you flip the switch, readjust the slug in T2, the transformer at the output of the balanced modulator. Then again set the pot and trimmer for least rf. Find the T2 setting that leaves the sidebands balanced when rf is minimum.

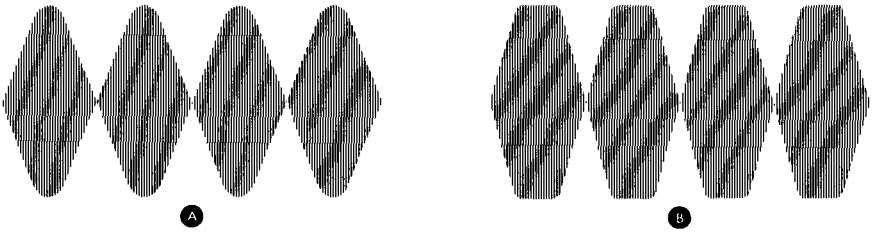

fig. 3. Four cycles of two-tone beat signal in rf output of ssb transmitter. A shows normal full modulation; B shows flat-topping.

checking other bands

The SB-34 is a multiband transceiver covering 15 through 80 meters. You'll need to align the other bands.

Set the bandswitch to 40 meters and tune to 7.075 MHz. Advance **mike gain** to mid-range. Adjust the 40-meter (rear) slug of L7 for maximum rf output. Tune up **pa tune** and **pa load** as usual. You shouldn't need to change the neutralizing trimmer.

Switch to 80 meters and tune for 3.8 MHz. The same slug in L7 affects 80 meters. Adjust it to split the difference between the output reading you got on 40 meters and the one you get on 80. With **mike gain** up almost to flat-topping, adjust **pa tune** and **pa load.** Output should be about 50 volts across the 50-ohm load.

Switch to 20 meters and tune to 14.25 MHz. Advance **mike gain** and tune up **pa tune** and **pa load.** At flat-topping, output should be 50 volts or more.

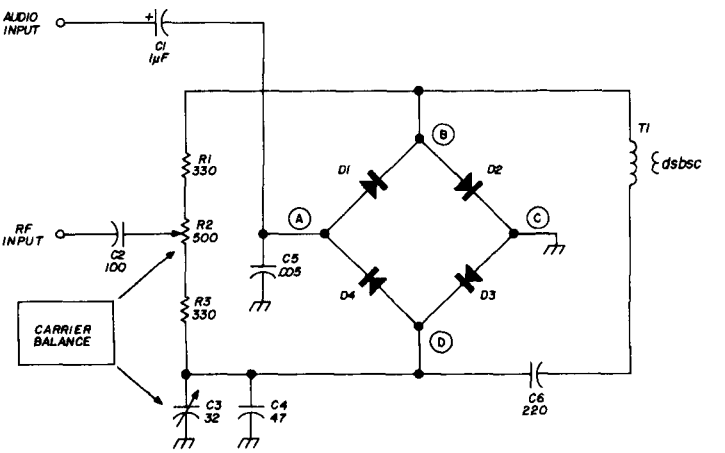

fig. 4. Balanced modulator in SB-34 is very typical. Balancing controls may have different labels; some models may have two trimmers.

In most ssb transmitters, only one oscillator is variable; the others are crystal controlled. In **fig. 1,** you can see several adjustments in those crystal oscillator and multiplier stages. You need only one simple rule of thumb to align them.

Connect an rf probe and vtvm to the driver stage. Be sure receiver alignment has been done. Work backward, aligning in this order: L6, T6, L4, T3, T5, and T4. Adjust each one for maximum rf measured at the driver. These adjustments are merely peaking devices for their respective signals; they're adjusted to pass along the most rf to the main transmitter stages.

A few transmitters have trimmers in the oscillators, to warp crystal frequencies precisely. They can be adjusted without a frequency meter, **if** the rest of the alignment has been precise. The maximum-rf system works for them, too.

An exception is the variable frequency oscillator, which determines output frequency. Fortunately, frequency precision isn't serious in the ham bands unless you're working near the edge.

Many vfo's have trimmers to calibrate the dial. This is done best in the **cw** or **tune** mode of the transmitter, so a carrier is being generated. The sideband could cause confusion. Best test indicator is a frequency meter, or a receiver that has been calibrated against WWV recently.

The way most transceivers develop their output frequencies—by a form of synthesis—the vfo has only one band to be calibrated. Then proper tracking among the various bands becomes a matter of making sure the crystals in the band-changing oscillator (see **fig. 1**) are accurate. Again, a frequency meter or calibrated receiver is the best indicator. Some transceivers have a 100-kHz calibration oscillator; you calibrate the receiver mode with that, and then check the transmitter against it.

other transmitters

Most of these principles outlined apply to all ssb transmitters. But of course there are exceptions, when transceivers have unusual stages. Study the schematic and block diagram of any transmitter you have to align. If the instruction manual doesn't have a block diagram, draw one; it'll help you understand what you're doing during alignment.

One typical exception is the 9-MHz carrier oscillator adjustment in a Gonset transceiver. If it's wrong, the sidebands are offset and distorted because they miss the bandpass curve of the filter that follows. There's an abbreviated block diagram of the arrangement in **fig. 5.**

If the oscillator puts the sideband off to one side of the filter's response curve, the amount of signal reaching the first transmitter mixer is less than normal. So the rf voltage at the emitter of that mixer is a good indicator. You adjust C23, the carrier oscillator trimmer, until rf at that point is exactly 65 mV (0.065 volt). More or less means the carrier oscillator is off frequency.

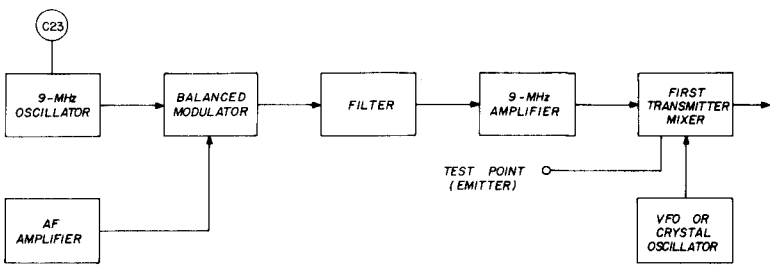

fig. 5. Early stages in transmitter using 9-MHz carrier frequency. In Gonset model, frequency trimmer (C23) is set according to rf voltages at test point after the filter.

linear amplifiers

The steps you followed with the final stage of the SB-34 are similar to those for any high-power linear final. However, there are precautions.

Set the bias before you do anything else. You may refine its adjustment later, but the main thing is to keep the bias high until everything else is properly tuned.

Next thing is to get the plate tuning dipped as soon as you can. That keeps current low and protects the tube (or keeps the overcurrent relay from kicking out). Make sure the exciter is furnishing enough signal. You can usually tell with an rf meter across the linear-amp input. Remember that you can't judge drive from the grid voltage; a linear amp doesn't develop grid current the way a class-C amplifier does.

When you're loading a linear amplifier into the antenna, do it gradually. Watch the dc plate current meter as well as the rf power output indicator. Many linear amplifiers can be loaded well beyond their proper (or legal) operating limits.

After each load increase, re-dip the plate tuning. Notice whether the rf output peak and the plate-current dip occur at the same setting of the plate tuning capacitor. If not, neutralize the stage before proceeding. An oscillating 1-kW linear can make a lot of trouble both for the tube and for parts in the circuit. It can start arcs you'll find nigh impossible to stop.

next month

So much for tuning up and aligning ssb transmitters. With what you've learned here, you should have no trouble following manufacturers' instructions or working out an alignment procedure for your own homebrew ssb rig.

The subject of next month's **repair bench** applies equally to ssb, am and cw rigs. It's oscillators. True, ssb rigs have a lot of them, but no transmitter can operate without at least one.

When an oscillator quits, it can be one of the most difficult troubles to pin down. So, be here next time and I'll explain in detail what makes oscillators quit. **ham radio**

IT'S HERE – THE
GALAXY
FM-210!

AT LAST, ALL AMATEURS HAVE AVAILABLE A TOP QUALITY, AMERICAN MADE 2 METER FM TRANSCEIVER AT A PRICE ALL CAN AFFORD. THIS FULLY SOLID STATE, FET FRONT END TRANSCEIVER OFFERS NO COMPROMISE PERFORMANCE FOR DIRECT OR REPEATER COMMUNICATIONS. A FULL 5 WATTS OF POWER OR 10 WATTS WITH THE OPTIONAL AC-DC POWER BOOSTER. HOW DOES GALAXY DO ALL THIS FOR

$199.95

PLACE ORDERS NOW FOR EARLY DELIVERY
SMALL DEPOSIT

FALL CLEARANCE SPECIALS
(Definition of CLEARANCE,
Removal of Obstructions or Hindrances)

DRAKE:
R4-A $315.00
TR-4, RV-4, AC-3 (Pkge.) $575.00
GALAXY:
Gal. V Mk2, AC-400 (NEW) Remote VFO (Pkge.) $395.00
Gal. V Mk2 (No Pwr.) $295.00
HALLICRAFTERS:
HT-37 (Like New) $210.00

Write for list of other Gear;
What Are Your Needs?

WANTED TO BUY FOR CASH, COLLINS EQUIPMENT, "S LINE" KWM-2 or What Have You?

Bob's AMATEUR ELECTRONICS
"THE COMPLETE HAM STORE"
Phone CE 5-6387
927 N.W. 1st Oklahoma City, Oklahoma 73106
"WE TAKE TRADE-INS ON ALL LINES OF NEW EQUIPMENT"
TWO-WAY RADIOS – SALES • SERVICE • INSTALLATIONS

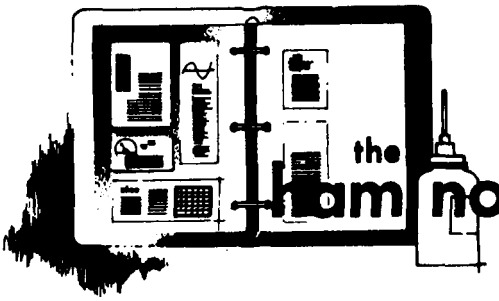

oscillators

The 40-meter Seiler oscillator shown in **fig. 1** was built by K1BBU as part of a low-power solid-state transmitter. Inductor L1 consists of 23 turns number 20 enamelled wound on an Amidon T68-2 toroid form (L = 3.2 μH). C1 is a 15-pF variable with a minimum capacitance of 2.3 pF (E. F. Johnson 148-1). C2, the 60-pF padder, is used for setting the frequency range. With these tuned-circuit constants the vfo tunes from 6.93 to 7.24 MHz. K1BBU reports that this circuit exhibits excellent stability and keying characteristics.

The Seiler oscillator circuit shown in **fig. 2** was built by W1DTY to see if the stability of a completely non-temperature-compensated Seiler oscillator was stable enough for 455-kHz ssb generation. Total drift in this circuit, as measured with a frequency counter, was 40 Hz, including warm-up drift. With a 33-pF N750 capacitor in parallel with the inductor, drift was less than 10 Hz from turn on. A 455 kHz crystal oscillator was turned on at the same time for comparison purposes; total drift of this circuit (shown in **fig. 3**) was 4 Hz.

fig. 1. Seiler oscillator tunes 6.9 to 7.2 MHz.

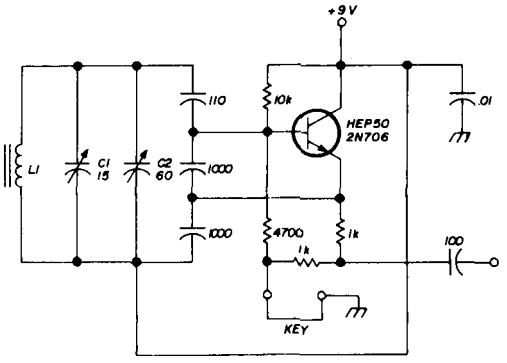

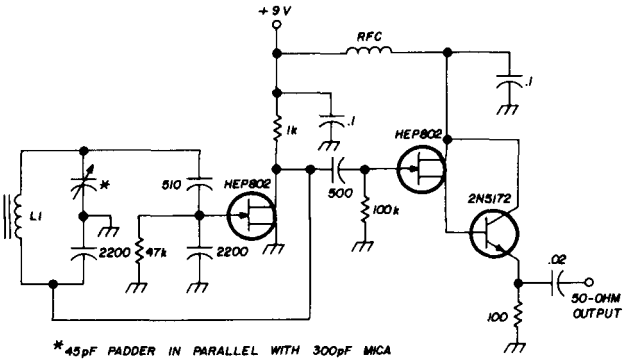

fig. 2. This 455-kHz Seiler oscillator exhibited less than 10 Hz drift when compensated with a 33-pF N750 capacitor.

Inductor L1 in the 455-kHz Seiler oscillator consists of 190 turns number 26 enamelled on an Amidon T68-2 form. When the 33-pF temperature compensating capacitor was added to the tank circuit, the 300 pF mica was reduced to 270 pF.

The buffer circuit in **fig. 2** provides excellent isolation for the oscillator and is capable of putting nearly 50 milliwatts of rf into a 50-ohm load.

The *simple crystal oscillator circuit* shown in **fig. 3** is an excellent circuit for crystals between about 70 kHz and 2 MHz. It presents a 32-pF load for the crystal. The voltage at the collector of the transistor should be approximately one-half

the supply voltage and can be adjusted by changing the value of the 100k base-bias resistor.

A simple crystal oscillator circuit for the frequency range between 2 and 20 MHz is shown in **fig. 4.** This oscillator is a modified Pierce circuit that provides good output and high stability. For proper operation the output of this circuit should work into 600 ohms or more. If the output load is less than 600 ohms, the fet-bipolar buffer circuit shown in **fig. 2** may be used.

overtone oscillator

The simple transistor overtone oscillator shown in **fig. 5** is designed for overtone crystals in the frequency range from 20 MHz to 100 MHz. The frequency of operation is determined by the tuned circuit. Capacitor C1 is a 25 pF trimmer with a minimum capacitance of 7 pF or less. Inductor L1 is chosen for the desired frequency as shown in the table in **fig. 5.** Most npn transistors with an f_T of 200 MHz or more will work in this circuit. In operation, the tuned circuit is adjusted to the overtone frequency of the crystal.

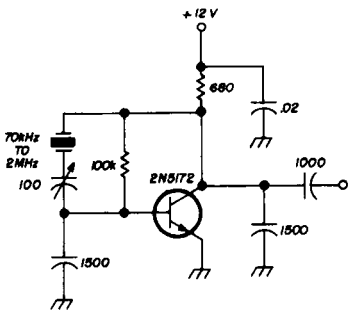

fig. 3. Simple crystal oscillator circuit for crystals from 70 kHz to 2 MHz.

fig. 4. This modified Pierce oscillator is useful for crystals from 2 to 20 MHz. Output should not be loaded with less than 600 ohms.

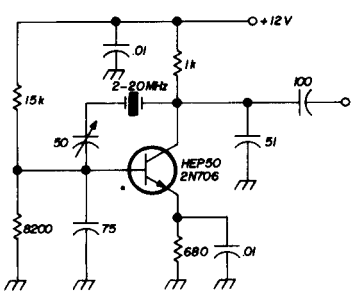

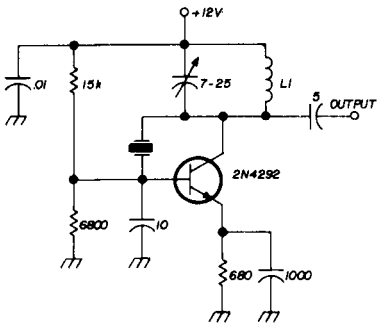

frequency (MHz)	L1
20 – 35	2.4 μH (Miller 4606)
35 – 60	.68 μH (Miller 4590)
60 – 100	.22 μH (Miller 4584)

fig. 5. Simple overtone oscillator covers the range from 20 MHz to 100 MHz.

half-watt solid-state cw transmitter

I have a friend who ridicules solid-state equipment, even after I've worked both coasts from mid-U.S.A. on six-meter phone with 100 milliwatts! So I told him I'd build and give him a solid-state cw transmitter. Its schematic is shown in **fig. 6.**

I made it as simple as possible, using junkbox parts and surplus or bargain transistors. It has only one tuned circuit, the output. The complete circuit evolved from several other circuits plus some ideas of my own.

At first, some of the base loads were rf chokes, but due to feedback or chassis ground loops, the final "took off" when detuned, so resistors were tried (with the same dummy antenna load). The resistors remained, and the unit is very stable.

The rf chokes are peaking coils from an old tv set; transistors are from IBM or similar boards sold everywhere. The coil is from an old surplus receiver.

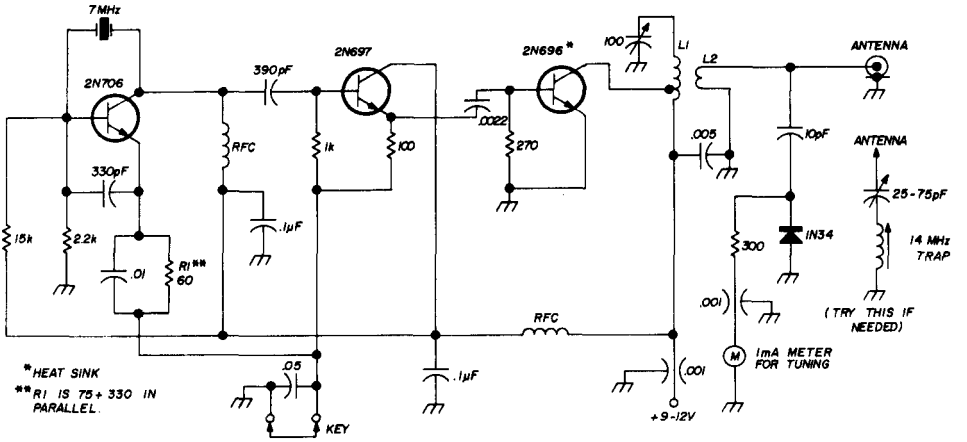

fig. 6. Solid-state cw transmitter built from junk-box parts. It puts out a half watt using a 12-volt supply.

The unit may be run at 15 or 16 volts, but all transistors should have heat sinks. It would be a good idea to change the 15 kilohm resistor in the oscillator base if you plan to run more than 12 volts. (Try 22 kilohms to 27 kilohms.)

The unit was connected to a Bird wattmeter and indicated 200 mW at 9 volts and 500 mW at 12 volts, with a total current drain of around 100 mA at 12 V. You'll probably get more output with a 2N697 in the final, because it has more gain than the 2N696. In my case, the 2N697 worked better in the driver stage. This will light a number 47 bulb to about normal brightness.

If the second harmonic is bad, try the trap shown. Dip it with a GDO, or insert a 15-MHz crystal in the unit and adjust the trap for no output, using your receiver. (The trap wasn't installed on his transmitter.)

Bill Eslick, KØVQY

three bands with two linears

Having two linear amplifiers is a sign of affluence, but they're mighty handy when there's a need to change bands quickly. I had a Hunter Bandit, but found a Heathkit SB-200 at a very attractive price, so I bought it. It occurred to me that here was a way to have one final for 10 and 15 meters (the SB-200) while the Hunter was on 20.

However, a question immediately arose: How can you have both linears in the line without a batch of switches or relays, or without manually changing coax cables? A brain storm gave me the answer, although at first I had some trepidations about trying it.

Each linear has an internal antenna relay that permits the exciter output to go directly to the antenna if the power to the linear is not activated. With the linear power on, the linear output goes to the antenna, while the exciter drives the linear. As shown in **fig. 7,** I connected the exciter to the input of one linear and the output of the second linear to the antenna. Two ac outputs from each linear are always connected to the line.

Thus, if I turn on the power to linear **1,**

fig. 7. Arrangement for separate amplifiers to give dual-band coverage. A spdt switch switches exciter vox between amplifiers.

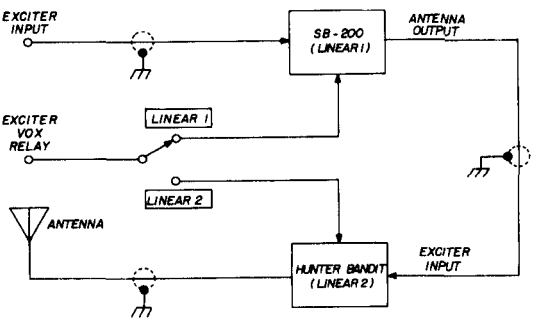

vhf-uhf manual

BY G.R.JESSOP, C.Eng., MIERE, G6JP

published by the Radio Society of Great Britain

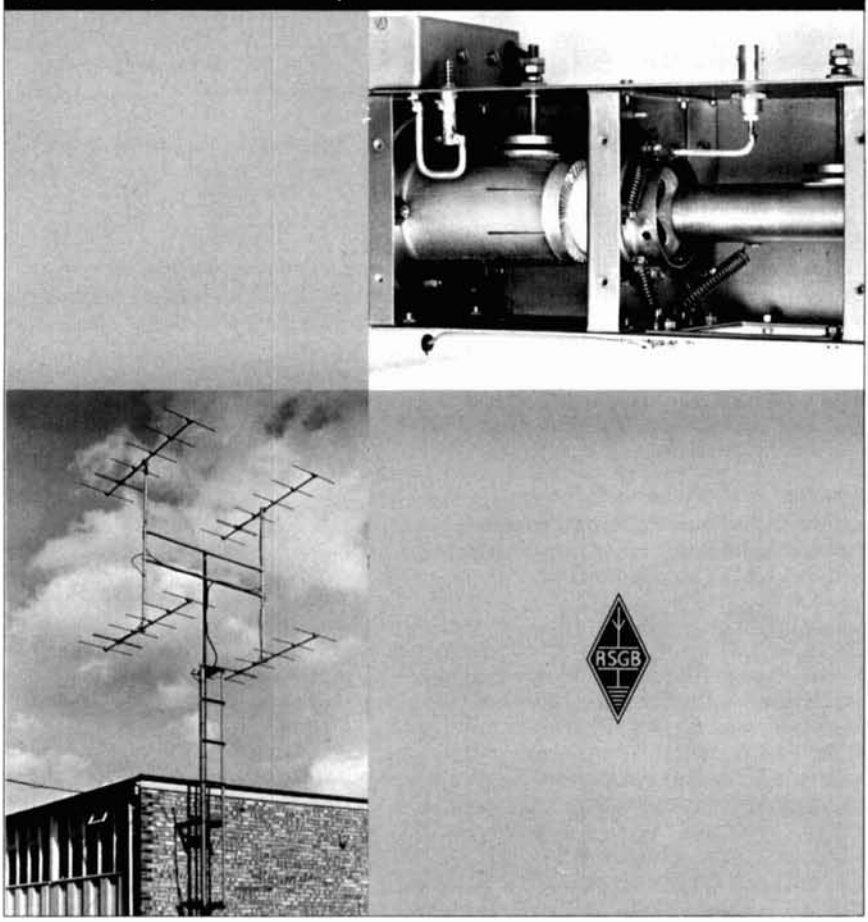

If you have any interest in the frequencies above 30 MHz then you need this book. It is probably the most comprehensive work of its kind ever produced, ranging from advanced material to simple circuits for the beginner to vhf. An attractive layout and clear style make the VHF/UHF Manual a most worthwhile addition to your library.

3.75 postpaid

book division

comtec

Box 592 • Amherst, New Hampshire 03031

"WE ARE THE EXCLUSIVE NORTH AMERICAN DISTRIBUTOR FOR RSGB PUBLICATIONS — DEALER INQUIRIES INVITED"

its output goes through to the antenna output of linear **2** and out on the air. If I put the power on linear **2,** the exciter feeds through the relay in linear **1** to the input of linear **2. Just don't put both linears on at once!**

The only other addition is a small switching arrangement to enable you to switch the output of the exciter vox-controlled relay to one or the other of the linears. As they run on different principles, I couldn't figure a way to avoid that one switch. However, someone may come up with an idea.

Gay E. Millius, Jr., W4NJF

low-voltage zener tester

With the advent of transistors and IC's, it's desirable to have low-voltage power supplies and transistor testers for use on the workbench. The tester described here is not the ultimate in zener testers, nor do I make any claim for its originality. But it does work, is very accurate, and the cost is within the reach of most serious hams and experimenters. It will measure zener voltage up to 10 volts at the desired current from 15 mA to 40 mA.

I must point out that you can't see the response curve of the device (a curve tracer is needed for this); but if you're certain the device is a zener, this tester will measure its breakdown voltage and allow selection of precise voltages. You can also check voltages of unmarked and surplus devices.

For testing low-voltage zeners, I feel it's desirable to use a constant-current source. A standard parameter used by many companies for 400 mW, 2.2- to 10-V zeners is 20 mA.

The voltmeter consists of the 100-μA meter 1 and its 100k multiplier. The accuracy of your tester will be determined by the accuracy of these two components.

I used a 100 μA API meter with 0.5 percent accuracy. Less expensive parts can be used if you're not too concerned with accuracy. The meter should be no larger than 100 μA, though because its loads the circuit.

To set up the tester, merely plug it in and short circuit point A to point B through a 50-mA meter. (**Yes** short circuit—this is a constant current source.) Adjust the 200-ohm pot for the desired test current. (I use 20 mA for 400 mA zeners.) Don't be concerned when the meter reads off scale without a zener across terminals A and B. The maximum output to the meter is only about 12 V dc, which means it's only about 20 percent overscale. This won't damage the meter.

After this adjustment, place the zener to be tested across test points A and B. The voltmeter will drop to the zener voltage at the set current.

If a unit should be placed backwards across points A and B, the voltmeter will drop to about 0.8 volt.

The layout of components isn't critical. I built my tester on vectorboard and placed it in a Bud 4x5x6-inch minibox.

M. Weinschenker, K3DPJ

fig. 8. Zener-diode tester uses constant-current source that is adjustable from about 15 mA to 40 mA. Zener voltage is read on the voltmeter consisting of the 100-microampere meter and 100k multiplier.

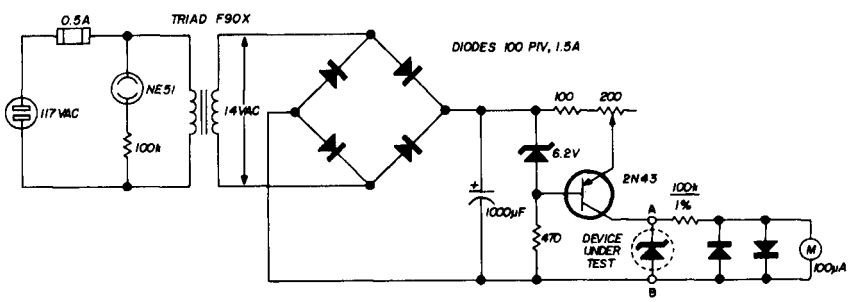

POWER / PORTABILITY / PERFORMANCE

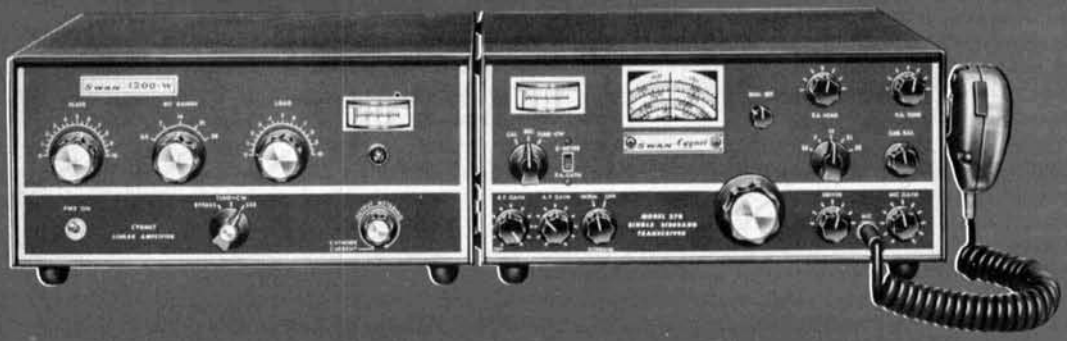

HIGH POWERED TEAM

Cygnet Linear Amplifier

1200 watt matching amplifier with self-contained AC power supply

For those times when the quarter kilowatt of the model 270 transceiver isn't quite enough to break through, the Cygnet Amplifier illustrated above provides a 5 times increase in power. Utilizing a grounded grid, super-cathode-drive circuit, both efficiency and linearity are exceptionally high. In a matching cabinet which includes the AC power supply, the 1200-W makes a most attractive companion for your Cygnet transceiver. It plugs directly into the Model 270, and may be adapted easily to the 260 as well as other transceivers.

SPECIFICATIONS: Power Rating: 1200 watts P.E.P. input with voice modulation, 800 watts CW input, 300 watts AM input. ● Covers 80,40,20,15, and 10 meters. ● Four 6LQ6 tubes operating as grounded grid triodes. ● Third order distortion down approximately 30 db. ● Pi output tank for 50 or 75 ohm coaxial antenna feed. ● Computer grade electrolytic filter capacitors. ● Silicon diode rectifiers. ● Complete with interconnecting cables, ready to plug into the 270 and operate. ● 117 volts, 50-60 cycles input. Available on special order for 208-220-240 volts. ● **Dimensions:** 5½ in. high, 13 in. wide, 11 in. deep. Weight: 25 pounds. (Carrying handle included.)

Amateur net: **$295**

Deluxe *Cygnet* 270 Transceiver

5 BANDS 260 WATTS for fixed, portable or mobile operation

A complete amateur radio station with built-in AC and DC power supply and loudspeaker. The Cygnet 270 contains all the features required for home station operation, yet it is compact and light enough to make an ideal "traveling companion" on those business or vacation trips.

SPECIFICATIONS: Power Input: 260 watts P.E.P. in SSB voice mode, and 180 watts in CW mode ● **Frequency Range:** 3.5-4.0 mc, 7.0-7.3 mc, 14.0-14.35 mc, 21.0-21.45 mc, 28.0-29.7 mc ● **C.F. Networks:** Crystal Lattice Filter. Same as used in the Swan 500-C. 2.7 kc band width at 6 db down. 4.6 kc wide at 60 db down. Ultimate rejection exceeds 100 db ● **Unwanted** sideband suppressed 50 db. **Carrier** suppressed 60 db. 3rd order distortion down approx. 30 db. ● **Audio Response:** flat within 3 db from 300 to 3000 cycles in both transmit and receive modes ● **Pi Antenna coupler** for 50 to 75 ohm coaxial cable ● **Grid Block CW keying** with off-set transmit frequency ● **Solid state VFO circuit** temperature and voltage stabilized ● **Receiver sensitivity** better than ½ microvolt at 50 ohms for signal-plus-noise to noise ratio of 10 db ● **100 kc Crystal Calibrator** and dial-set control ● **S-meter** for receiver, P.A. Cathode meter for transmitter tuning ● **Improved** AGC and ALC circuit. Separate **R.F.** and **A.F.** gain controls ● **Sideband selector** ● Provision for **plug in of VOX** unit, external VFO, headphones, and Cygnet Linear ● **Tube compliment:** 12BA6 VFO amp., 12BE6 trans. mixer, 6GK6 driver, 6LQ6 pwr. amp., 6BZ6 rec. R.F., 12BE6 rec. mixer, 12BA6 1st I.F. amp., 12BA6 2nd I.F. amp., 12AX7 prod. det. A.F. amp., 6AQ5 A.F. output, 12AX7 mic. amp., 6JH8 bal. mod., 12AV6 AGC-ALC amp. **Dimensions:** 5½ in. high, 13 in. wide, 11 in. deep. Net weight: 24 lbs.

Amateur net: **$525**

PLUG-IN ACCESSORIES: Model 508 External VFO, Model 510X Crystal oscillator, Model VX-2 VOX unit.

OTHER ACCESSORIES: Model FP-1 Phone Patch, Mobile Mounting Kit, Model 45 Manual Switching 5 band Mobile Antenna, Model 55 Remote Switching 5 band Mobile Antenna.

SWAN
ELECTRONICS

For better ideas in amateur radio.

OCEANSIDE, CALIFORNIA • A subsidiary of Cubic Corporation

SEE YOUR SWAN DEALER SOON FOR COMPLETE DATA ON THE SWAN LINE

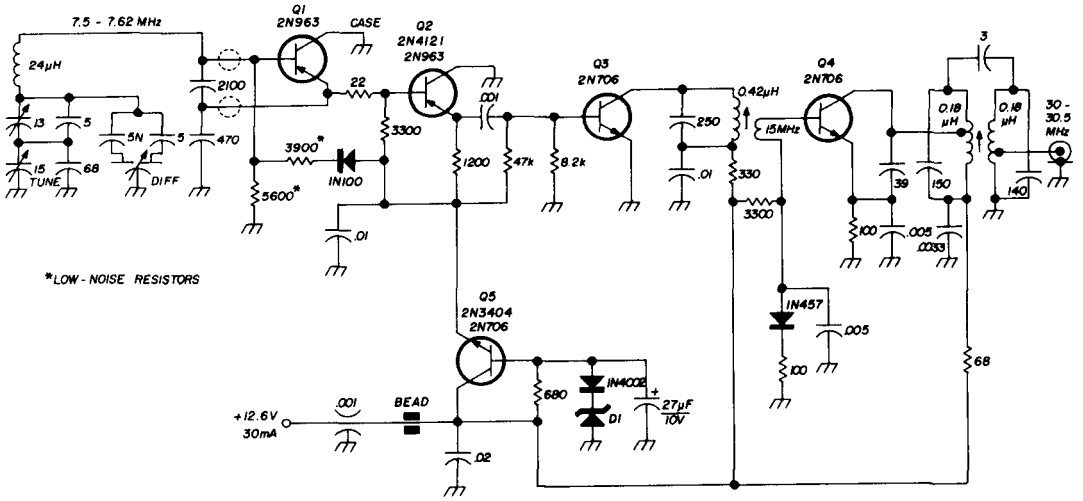

fig. 9. Vfo used by W1OOP as part of his two-meter system. Diode D1 is an 8.4 to 9.3 volt reference diode such as the 1N935A or 1N3154; temperature coefficient is important. According to calculations, the power dissipated in the oscillator tuned circuit is less than 3 mW.

vfo transistors

When choosing a transistor for a vfo, several characteristics should be considered: power gain, thermal resistance and capacitance. Transistors with high power gain allow loose coupling to the resonant circuit so transistor changes have less effect on frequency; high f_T ratings imply high power gain.

Thermal resistance characteristics (degrees rise per milliwatt) are important because transistor characteristics and capacitances drift with temperature; less

fig. 1. Oscillator transistors listed by figure of merit.

JEDEC Number	Type		f_T (MHz)	Pin (mW)	C_{ob} (pF)	Thermal Resistance °/W	Figure of Merit	Remarks
2N1141	pnp	ge	300	5	2	100	400	class C
plastic 2N918	npn	si	400	10	1.7	200	154	slow heating
2N963	npn	si	300	5	2.5	250	150	low-cost switch
2N700A	pnp	ge	400	5	1.4	600	110*	vhf
2N2368 40405	npn	si	300	10	3.5	150**	79	saturated switch
2N4121	pnp	si	400	10	4.5	250	76	slow drift
2N3866	npn	si	600	50	4	34***	60	class C
2N918	npn	si	400	10	1.7	580	53	vhf
2N706 40404	npn	si	200	10	5	150**	45	saturated switch, some noisy
2N1742	pnp	ge	500	12	2.5	1000	27	slow heating
2N3250	pnp	si	300	50	6	150	16	general purpose

* When biased at 5 V, 1 mA; figure of merit drops to 70 when device is biased to 5 V, 2 mA.

** Use thermal resistance of 200°/W because of polarity.

*** Use thermal resistance of 100°/W because of polarity.

It's no secret ...

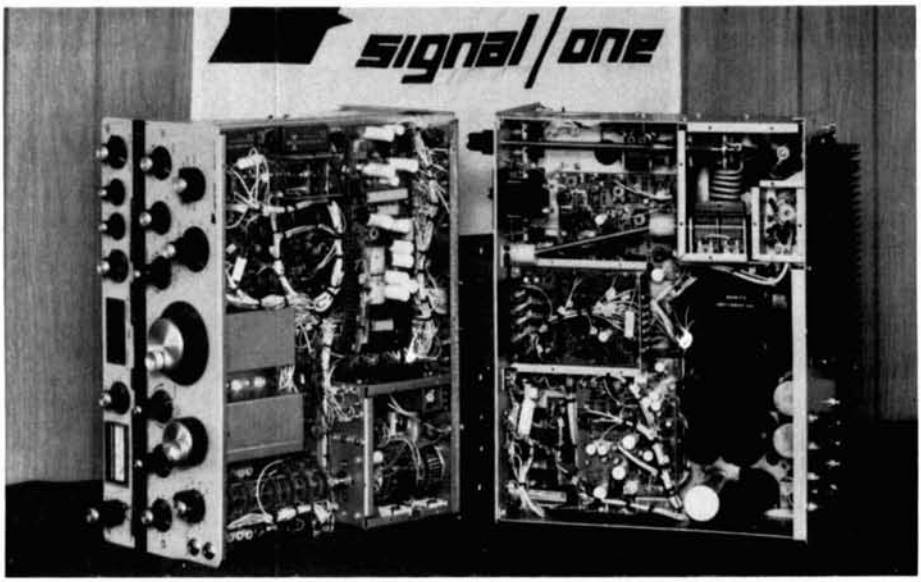

The *signal/one* CX7

CENTER OF ATTENTION at twenty major ham conventions this year ...
Maybe you saw it ... even operated it. But if the crowd kept you from getting a *really good look*, here are highlights of the inside story of ...
the "DELUXE INTEGRATED STATION" ...

PERFORMANCE ... built in
- Dual-gate MOSFET receiver
- Ultra-sharp selectivity
- IF Shift (to slice off QRM)
- 300 watts input *all* modes
- RF clipping (for maximum *punch*)
- Pre-IF noise blanker

CONVENIENCE ... built in
- Instant band change *without tune-up*
- Frequency readout direct to *100 Hz*
- Transceive *plus* auxiliary receive
- Dual VFO's (for *split* operation)
- *True break-in* CW, silent VOX
- Integral AC supply *and* CW keyer

COVERAGE... built in
- All ham bands 10 *thru 160* meters
- Full *1 MHz* bands cover WWV, MARS
- All popular modes ... SSB, CW, FSK.

QUALITY ... built in
- Glass-epoxy etched circuit boards
- Instrument-grade components
- Continuous duty at full ratings
- Modularized construction

TO GET THE FULL STORY ...
write for an illustrated brochure.

Now distributed in the Pacific Northwest by HCJ Electronics, E. 8214 Sprague Avenue, Spokane, Washington 99206.

It Speaks for Itself"

signal/one

A Division of ECI (An NCR Subsidiary)

2200 Anvil Street N. • St. Petersburg, Florida 33710

temperature rise means less drift. Lower thermal resistances are found when the collector is tied to the case, so this is often an important consideration.

Some applications require appreciable power output from the vfo, but if you don't need it, low-power operation is preferred. Pick a transistor that has high gain at low voltage and current; some types such as "forward-agc i-f and rf amplifiers" are poor performers at low voltage. Most transistors that are characterized for class-C operation are good. Computer types are usually good, but silicon "saturated-switch" types may be noisy at low frequencies. Power level for crystal-controlled oscillators is limited by crystal heating; high f_T minimizes this.

Other important considerations in vfo design are transistor size and polarity and supply voltage. Smaller transistor packages are preferred; as far as polarity goes, pnp transistors are preferred for grounded-collector operation in mobile power supplies in American cars. Mobile operation is also an important consideration when discussing power supplies: automotive battery voltage means a maximum of nine volts regulated—well regulated—to the oscillator.

The best way of choosing a semiconductor is to establish a figure of merit for oscillator transistors. This figure of merit should be proportional to f_T, and inverse as the square root of the output capacitance at the operating voltage, inverse as the thermal resistance and inverse as the dc power input at the operating point. The transistors in **table 1** are listed according to this figure of merit.

The vfo transistor in the circuit of **fig. 9** is a 2N963, an inexpensive switching transistor with an extremely good oscillator figure of merit. In the circuit I built, emitter voltage on the 2N963 is 5.3 volts and emitter current is 1.1 mA; total input power is 5.8 mW. Since the thermal resistance (junction to case) is 0.25°C/mW, the temperature rise of the semiconductor junction in this circuit is 1.46°C maximum. Power dissipated in the tuned circuit is less than 3 mW.

The basic 7.2 to 7.5 MHz output of the vfo drives the doubler stage Q3; the output from Q2 drives another 2N706 doubler, Q4, to 30 MHz. The 30 to 30.5 MHz output is used with a 114-MHz crystal controlled source in a conversion scheme to provide vfo control on two meters.

Hank Cross, W1OOP

trimmers

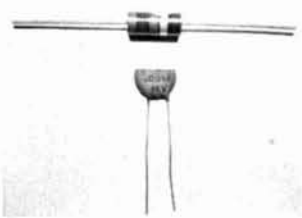

The components illustrated above have not been ruined. This simple technique of adjustment may be old hat to electronics technicians, but it always seems to surprise hams. It is especially useful when breadboarding with junk-box components.

Resistors may be adjusted upward in resistance as much as 50% with a file, as shown; the cut illustrated raised this resistor by about 20%. With this method it is possible to make your own 1% resistors or to match a set of components. The filing can be done with the resistor connected in a bridge or other active circuit; remember to start with a resistance lower than the desired value. For reasonable changes, the reduction in power-handling capacity is small.

Ceramic capacitors may also be trimmed in the same manner, with a file or grinder. Practical adjustment range is 50%, and the illustrated capacitor measured about .0025 pF. In-circuit changes are possible.

After reaching the desired value, brush or wash away any dust, and apply a coating of insulating varnish or spray. With careful preparation, these "precision" components are as good as the expensive kind.

Dale E. Coy, W5LHG

the spoilers.

the *hallicrafters* SR-400 CYCLONE transceiver system has more than a score of built-in features. they'll spoil you!!!!

this CW and SSB Cyclone system is unmatched by any other on or off the market. just look at the score of features built-into the transceiver alone:

• RIT • AALC • Notch Filter • CW Filter • CW Sidetone • Grid Block Keying • Front Panel Bias Adjust • 1 kHz Readout • Noise Blanker • Switched full metering • Upper/Lower SSB • Phone Patch Output • Xmit and Receiver Antenna Connectors • 6 Pole Xtal Lattice Filter • Semi-Automatic Break-In CW • MOX • VOX • PTT • 100 kHz Xtal Calibrator • Adjustable Pi Network

Accessories include:
PS-500A-AC Power Supply, HA-20 VFO, HA-1A Keyer. see and buy the "the spoilers" today at your local Hallicrafters distributor. go ahead and spoil yourself!

the hallicrafters co.
A Subsidiary of Northrop Corporation

600 HICKS ROAD
ROLLING MEADOWS, ILLINOIS 60008

CQ de W2KUW

WE NEED YOUR SURPLUS TUBES

1P21
2C39
2K25
2K48
2K (any digits)
3-400
3-1000
3B24
3B28
3CX2500
3CX3000
3CX5000
3CX10,000
3E29
3K (any digits)
4-65
4-125/4D21
4-250/5D22
4-400A/8438
4-1000A/8166
4X150A
4CX250B
4CX250R/7580W
4CX300
4CX250A/8321
4CX1000A/8168
4CX3000A/8169
4CX5000A/8170
4CX5000R/8170W
4CX10,000/8171
4X150G/8172
4PR60A or B
4PR (any digits)
5-125B/4E27A
5R4WGB
6BL6
6BM6 or 6A
6L6
7D21
8D21
9C21
9C25
75TL
304TL
VA (all types)
250TH
450TH
450TL
QK (all types)
715C
802
805
807
810
811A
812A
813
832A
833A
891
891R
TW (all types)
TWT (all types)
NL (all types)
4000 series
5000 series
6000 series
7000 series
8000 series

Please send us your surplus inventory lists. We want to buy other tubes as well as those listed above.

THEODORE E. DAMES CO.

308 HICKORY ST., ARLINGTON, N. J. 07032

Phone: 201 998-4246

VHF COMMUNICATIONS is the quarterly magazine for amateurs interested in VHF and UHF technology and equipment construction. It is the international, English edition of the well-known German publication UKW-BERICHTE.

VHF COMMUNICATIONS provides sixty pages of modern, but practical construction articles in each issue. Described are transmitters, receivers, converters, transceivers, antennas, test equipment, etc. The designs reflect truly current technology. Solid state devices and printed circuits are used extensively. All mechanical construction data are included. However, for the amateur without fabrication facilities, special components, such as p.c. boards and stripline cavities, are made available, readily and inexpensively.

Subscription rates US $3.00 ($4.00 air mail) per calendar year. Single issues $1.00.

★

Two Meter Converter Kit. All major components for the FET converter described in VHF COMMUNICATIONS of Feb. 1969. Noise figure: 2. I.F. 28-30 MHz. Kit includes: five transistors, coil forms, trimmers, silverplated glass epoxy p.c. board, KVG crystal (38.667 MHz).

220 MHz Converter Kit. As above, with 48.000 MHz KVG crystal.

6 Meter Converter Kit. As above, with 22.000 MHz KVG crystal (mult. stage not req'd).

Kit prices: $14.95 each. Crystals for other I.F.'s (specify). $1.00 extra.

---

432 MHz Converter Kit. Described in VHF COMMUNICATIONS of May 1969. I.F. 144-148 MHz. Kit includes silverplated stripline cavity with feed thru's and trimmers, p.c. board, two coil forms, two trimmers. Price $27.50 KVG crystal for above (96.000 MHz): $4.50.

1296 MHz Converter Kit. Described in VHF COMMUNICATIONS of February 1969. Kit includes silverplated RF cavity p.c. board for 28-30 MHz I.F. Price: $41.50. KVG crystal for above (84.533 MHz): $4.50.

Two Meter SSB Transmitter Kit. Described in VHF COMMUNICATIONS of May 1969. Includes p.c. board, coil forms, trimmers, 9 transistors, 3 diodes. Price: $49.50. Crystal filter and USB/LSB crystals for above (KVG XFGA) $24.50.

SPECIAL: Calendar year magazine subscription for only $1.00 with an order for any of the above!

VHF COMMUNICATIONS

TOPSFIELD, MASSACHUSETTS 01983

THE WEST COAST'S PIONEER GALAXY DISTRIBUTOR

has a NOVEMBER SPECIAL for you!

Wattmeter/
Antenna Selector
RF-550
$69.00

Transceiver
GT-550
$475.00

Speaker
Console
SC-550
$25.00

WE WILL INCLUDE A FREE VOX-35

WITH EVERY GT-550 SOLD BEFORE NOVEMBER 30, 1969

(OR UNTIL THE STOCK RUNS OUT).

POWER SUPPLY
AC-400
$89.95

DON'T WAIT,

RUSH YOUR ORDER TODAY

REMOTE VFO
RV-550
$75.00

FOR THE HOT, HUSKY, AND HANDSOME

NEW GALAXY GT-550 TRANSCEIVER,

Only $475 to:

ALFRED G. ROACH, W6JUK

Dymond
ELECTRONICS

515 BLACKSTONE · FRESNO, CALIFORNIA 93701
Telephone 209/233-6556

Operated by Hams for Hams

Prepaid anywhere in Continental U. S. A.

WANTED

NAME: Inoue FDFM-2S.
ALIAS: "That tiny little rig."

WANTED: For being the best amateur 2-meter FM transceiver on the market.

DESCRIPTION: Very small (shown above with package of cigarettes); beautiful appearance and design; 5 watts output; 6 channels; completely solid state; sensitivity less than 0.5μV @ 20 db of quieting.

APPROACH WITH CAUTION: You'll want one! Known to be on display at your local ham store.

Dealer Inquiries Invited

VARITRONICS INCORPORATED

3835 North 32nd Street • Suite 6 • Phoenix, Arizona 85018
Phone 602/955-5610

See us at SAROC in Las Vegas

flea market

RATES Commercial Ads 25¢ per word; non-commercial ads 10¢ per word payable in advance. No cash discounts or agency commissions allowed.

COPY No special layout or arrangements available. Material should be typewritten or clearly printed and must include full name and address. We reserve the right to reject unsuitable copy. **Ham Radio** can not check out each advertiser and thus cannot be held responsible for claims made. Liability for correctness of material limited to corrected ad in next available issue. Deadline is 15th of second preceeding month.

SEND MATERIAL TO: Flea Market, Ham Radio, Greenville, N. H. 03048.

TOROIDS. 88 & 44mhy., center tapped, not potted, 5/$2.00 POSTPAID. Model 32KSR 60 or 100 speed page printer, little use-good operating condition $200. Reliable model 15 $70. Versatile Model 19 set $95. FRXD10 Combination 14 typing reperferator and TD, sync motor $25. 11/16" oiled reperf tape $3/box/10 rolls. $10/case/40. Tape winders with sync motor $6. FACSIMILE paper (12x19, 250 sheets) new $4. Heath Seneca 6&2 meter $110. Hammarlund HQ110A $110. RCA CV-57URR Terminal Unit $120. Clegg 66er Brand New $150. WANTED: Ham-M rotator. Stamp for list. Van W2DLT, 302H Passaic Avenue, Stirling, N.J. 07980.

SAROC: new QTH Stardust Hotel, new QTR February 4-8, 1970. Cocktail parties hosted by **Ham Radio Magazine, Swan** and **Galaxy.** For additional information and Stardust Hotel special SAROC room rate card QSP SASE SAROC, Box 73, Boulder City, NV 89005.

NEW 500 MFD, 25 vdc electrolytic capacitors 1" diameter by 2¼", 20/$3.50 pp. HAL Devices, Box 365M, Urbana, Illinois 61801.

QST's OF MAY AND JUNE 1916 wanted. Price or trade no object. W2KUW, 308 Hickory St., Arlington, N. J. 07032.

TECHNICIANS: Fast growing cable television company needs electronic technicians in several areas. If you are young, outdoors type, and have experience in trouble shooting and repair of transistorized amplifiers, send complete resume or call Aurovideo, Inc., 1380 Main Street, Waltham, Mass. 02154. 617-891-6748.

SWAN 250 with 117XC AC supply, VOX unit, 100 kc calibrator $325. 6M. Gonset sidewinder 910B with AC supply $250. Gonset COMM III 6 meters $130. Gonset COMM IV 6 meters $155. Gonset VHF VFO #3357 $50. Heathkit HR-10B ham band rcvr. $60. Globe King 500A (4 ft rack) 500 watt AM & CW xmtr. $1.50. Globe DSB 100 $35. Hallicrafters gen. coverage rcvr. SX71 $90. Hallicrafters military R-44/ARR-S rcvr. 28 - 146 megs with AC supply $75. All equipment is in mint condition and works excellent. You pay shipping. Tom Dittrich, WB2LZD, 249 Meadow Lane Vestal, New York 13850.

TEST EQUIPMENT: HP 524 D Counter $495; HP 400 DR VTVM $45; Dumont 401 BR $150; Tektronix RM 15 $400. All equipment in excellent condition. D. G. Wilson, W6GOT, 2036 Briarwood, Santa Maria, CA. 93454. 805-WA 5-0754.

TELETYPE PICTURES for sale. 50 pictures for $1.00. Perforated and audio tapes also available. Pictures for volume two solicited. W9DGV, 2210 - 30th St., Rock Island, Illinois 61201.

NOVICE THREE-BAND DOUBLE INVERTED-VEE. Tuned, Assembled, SWR under 1.5-to-1 15-40-80 novice bands, gets out, $15.75. Triangle Antennas, Box 276, Warrington, Pa. 18914.

SAVE. On all makes of new and used equipment. Write or call Bob Grimes, 89 Aspen Road, Swampscott, Massachusetts, 617-598-2530 for the gear u want at the prices u want to pay.

PHOTOCOPY of an article from electronic magazines, $1 ea. Single pages 15¢. XXXP boards etched 10¢ sq. in. GE 15¢. Hornung, 1751 Creek Drive, San Jose, Cal. 95125.

BUILD 10 NEW electronic projects with my illustrated booklet, $2.00 postpaid. James Fred, RR 1, Cutler, Ind. 46920.

ROCHESTER, N. Y. is again Hamfest, VHF meet and flea market headquarters for largest event in northeast, May 16, 1970. Write WNY Hamfest, P. O. Box 1388, Rochester, N. Y. 14603.

ANNUAL TEXOMA HAMARAMA which will be held again at the beautiful Lake Texoma State Lodge, November 14-15-16, 1969. Registration is $2.00 per person. Programs, swapping and goodies. A family affair for anyone interested in radio. Plenty of camping and trailer spaces available. For Lodge or Cabin accommodations, write or call directly to the Lake Texoma Lodge, Kingston, Oklahoma 73439. Phone 405-564-2311. Mail registrations for the Hamarama to Texoma Hamarama, P. O. Box 246, Kingston, Oklahoma 73439.

QSLS. SECOND TO NONE. Same day service. Samples air mailed 25¢. Ray, K7HLR, 25 South Terrace Drive, Clearfield, Utah 84015.

ARE YOU INTERESTED IN THE PHENOMENA OF UNIDENTIFIED FLYING OBJECTS? DATA-NET is an association of radio amateurs and non-Hams with a serious interest in the UFO phenomena. The net has stations across the United States and several foreign countries. DATA-NET publishes a monthly report to the members made up of news, information, reports of sightings, investigations, articles, and clippings contributed by the member-stations. Four dollars a year covers cost of publishing and mailing the DATA-NET REPORT. Write Data-Net Control, WB6RPL, 624 Farley St., Mountain View, Calif. 94040.

GREENE DIPOLE CENTER INSULATOR . . . see ad page 96, September 1969 Ham Radio.

DEALERS. Do you carry R.S.G.B. publications? They are real best sellers. Interesting and well priced. For complete information write Comtec, Box 592, Amherst, N. H. 03031.

FOR SALE SWAN 250 & 117 Power Supply $350, or best offer. Henry Darrell, 2506 64th Kansas City, Kans. K0LXU.

WORLD QSL BUREAU — see ad page 89.

ORIGINAL EZ-IN DOUBLE HOLDERS display 20 cards in plastic, 3 for $1.00, 10 for $3.00 prepaid. Guaranteed. Patented. Free sample to dealers. Tepabco, John K4NMT, Box 198R, Gallatin, Tennessee 37066.

WANTED POLY-COMM-2, Perfect condition. All wire AC and DC and mike. WA3LGC, 136 Lamont Avenue, Glenolden, Pa. 19036.

POLICE — FIRE — AIRCRAFT — MARINE Calls on your broadcast radio with TUNAVERTER S! Tunable — Crystal! Brochure. Salch Company, Woodsboro HMC, Texas 78393.

FOR SALE: KWM-2 #12566 and #15750 (both latest series), 516F-2's, $825 and $875. 312B-4, $145. 75S3 #10679, $375. 75S3-B #16895, $495. Henry 2K-2, spare 3-400-Z, $575. HT-32-A (immaculate), $275. R4-A, T4-X, AC-4, MS-4 (late production), $625. Swan 350, 117-XC, 14-117, $395. HW-32-A with HP-13 or HP-23, $125. HW-12-A with HP-13 or HP-23, $120. Tektronix 514-D, $195. 136B-2 Noise Blanker (KWM-2), $65. Comdel CSP-11, $75. 30L-1 and 312B-5 (both in factory-sealed cartons), 15% off, HO-13 "Ham Scan", $35. F455J-05, $50. F455FA-15, $45. F500B-31, $35. C. E. QT-1 VOX, $10. Messenger III (new), $125. KWM-1, 516F-1, $225. James W. Craig, W1FBG, 29 Sherburne Avenue, Portsmouth, New Hampshire 03801. 603-436-9062.

SPACE AGE KEYER

Only $67.50

- Planar epitaxial *integrated circuits* for reliability. No tubes—No separate transistors.
- Precision feather-touch key *built-in.*
- Fully digital—Dot-dash ratio always perfect.
- No polarity problems—Floating contacts switch ±300-V @ 100-ma.
- Rugged solid construction—will not walk.
- Send QSL or postcard for free brochure.

PALOMAR ENGINEERS
BOX 455, ESCONDIDO, CAL. 92025

radio amateur **callbook**

Radio Amateur Emblems engraved with your call letters.

Charm — ☐ Gold ☐ Rhodium — call letters — **$5.00 Ea.**

Tie Bar — ☐ Gold ☐ Rhodium — call letters — **$5.00 Ea.**

All illustrations are actual size.

Lapel Pin — ☐ Gold ☐ Rhodium — call letters — **$5.00 Ea.**

***Rush Order To:* RADIO AMATEUR CALLBOOK, Inc.**
Dept. E. 925 Sherwood Drive, Lake Bluff, Ill. 60044

SELL: 2K25 KLYSTRONS. 5 only. Unused. $5 each. Guaranteed. WØDAK. E. A. Farley, 1641 Eleanor, St. Paul, Minn. 55116.

QSL'S — BROWNIE W3CJI — 3111-B Lehigh, Allentown, Pa. 18103. Samples 10¢. Cut catalogue 25¢.

WANTED: 200 HZ and 1500 HZ FILTERS for Collins S-Line receiver. W1DTY, Box 25, Rindge, N.H. 03461.

AEROMOTOR TOWER 85′ four legs; 35′ masting; gin pole; prop pitch rotor. Mosley S402 and TA36 Antennas; Telrex 11 element 6 meters — Ranger II; HX30; T/R Switch. Will ship. Joe Engressia, 9050 SW 117 Avenue, Miami, Fla. 33156.

WRL's used gear has trial-terms guarantee! 75S1 - $299.95; G50 - $159.95; SR150 - $299.95; HW12 - $89.95; Swan 250 - $279.95; DuoBander 84 - $119.95; NC200 - $249.95; SB34 - $299.95; Valiant - $149.95; Ranger - $99.95; Galaxy 300 - $139.95; Galaxy Vmk2 - $299.95; many more. Free "blue-book" list from WRL, Box 919, Council Bluffs, Iowa 51501.

THE ELECTRONIC MAIL ADVERTISER published by WO Bargains Galore, is the fastest, most readable listing of electronic bargains. Twice a month, 6¢ a word when you subscribe. For a free sample send your QTH to Electronic Mail Advertiser, 1949 Van Reek Lane, St. Louis, Missouri 63131.

WANTED - April '68 Ham Radio. $1.00?? Dick, WN7JYH; 601 S. 15th St., Laramie, Wyoming 82070.

RARE COUNTY ACTIVITY. The NJDXA will operate from the "very rare" Warren County in New Jersey. Call sign: W2JT/2. Continuous operation from 1600 GMT on October 18th to 2000 GMT on October 19th. Frequencies: CW 3555, 7055, 14055, 21055, & 28055 KC. SSB 3855, 7255, 14255, 21355, & 28555 KC. QSL information: SASE to W2JT or to the "W2" QSL Bureau.

COMMERCIAL LICENSE EXAMS: Second $17.50; First $25.00; Sample questions; Price list $1 refundable. D. C. Enterprises, P. O. Box 432, Sparks, Nv. 89431.

QSL'S, 15¢, Nicholas Print, P. O. Box 11184, Phoenix, Arizona 85017.

TOROIDS 44 and 88 mhy. Unpotted. 5 for $1.50 ppd. M. Weinschenker, Box 353, Irwin, Pa. 15642.

FIFTH MASSACHUSETTS QSO PARTY. Start at 2300 GMT, Nov. 1, 1969 and end at 0500 GMT, Nov. 3. No time restrictions. A station may be contacted only once per band. Each phone and CW segment considered a separate band. Cross-band contacts are not allowed. The general call will be "CQ MASS" and Massachusetts stations will identify themselves by signing "DE MASS" followed by their call. Send QSO number, RS(T) and location (county for Mass. stations, state or province for others). Logs should show: date and time of contact in GMT, station worked, signal report sent and received, QSO numbers sent and received, county, state or province, frequency and type of emission. Foreign stations count for QSO's with Mass. stations, but not for multipliers. One point for each report received and one point for each report sent and acknowledged. Mass. stations multiply QSO points by the number of different states and provinces worked. Outside stations multiply QSO points by the number of different Mass. counties worked. All logs must be postmarked by December 1, 1969 and mailed to: M.I.T. Radio Society, W1MX, Box 558, 3 Ames St., Cambridge, Mass. 02139. Include s.a.s.e. to receive results. Entry must include a signed statement that the operator observed all rules of the contest and radio regulations of his country. **Suggested frequencies:** CW: 3560, 7060, 14060, 21060, 28060. SSB: 3960, 7220, 14290, 21410. Novice: 3735, 7175, 21110.

NORTHERN CALIFORNIA Hams: Best deals — new and reconditioned equipment. Write or stop for free estimate. The Wireless Shop, 1305 Tennessee, Vallejo, California 94590.

MAGAZINES. QST since March 1944. CQ since 1947. Sold as individual copies. What issues do you need? Write K1PSR, Box 132, Amherst, NH 03031.

QST'S WANTED: December 1915, January to December 1916. Any unreasonable price paid! Ted Dames, 308 Hickory St., Arlington, N. J. 07032.

NEMS-CLARKE RECEIVERS WANTED. 1400 Series crystal controlled telemetry models covering 215-245/260 MHz preferred but all models in 1300, 1400, 1500, 1600 and higher numbered series also of interest. Please send accurate description of what you have to TUCKER ELECTRONICS CO., POB 1050, Garland, Texas 75040.

YOUR AD belongs here too. Commercial ads 25¢ per word, Non-commercial ads 10¢ per word. Commercial advertisers write for special discounts for standing ads not changed each month.

TWO STORES TO SERVE YOU

New Address:

L. A. AMATEUR RADIO
24214 CRENSHAW BLVD.
TORRANCE, CALIF. 90503
Phone 534-4456

EVANSVILLE AMATEUR RADIO
1311 NORTH FULTON AVE.
EVANSVILLE, INDIANA 47710

— BIG CASH DISCOUNTS EVERYDAY —

HAM & C.B. HEADQUARTERS

$AVE UP TO 15% ON PACKAGE DEALS

MON., WED., FRI. — 10-6:00 p.m. **TUE., THUR. — 10-8:00 p.m.** **SAT. — 10-6:00 p.m.**

SPECIALS OF THE MONTH

NEW — Ham/M (reg. $129.95) **$99.95**
NEW — TR-44 (reg. $59.95) **$59.95**
DISPLAYED — NEW Swan 500C **$485.00**

Write for Hy-Gain and Mosley package deals

COLLINS

KWM/2 W/AC Supply, **Clean** $675
75S/1 W/6&2 Xtals & "Q" 299
KWM2 Mobile DC Supply 89
KWM2 Mobile Mount 30

DRAKE

R4A **Very Clean** 295
R4B Displayed, **New** 369
T4XB Displayed, **New** 389
TR/3, **Very Clean** 369
TR/4, **Like New** 449
2A Rcvr, **Clean** 129
2B Rcvr, **Very Clean** 179
2BQ With Spkr 20
2AQ With Spkr 15

GALAXY

GT550 Displayed 389
GAL V, **Clean** 239
GAL III, **Nice** 159
GAL MK 3, **Like New** 299
GAL RV1 VFO, **New** 59
DuoBander 40/80 109

HALLICRAFTER

HW 37 Xmtr 175
HT41 Linear, **New Tubes** 165
HT44 Xmtr 169
HT18 VFO, **Clean** 20
SR500 TriBander 225
SX100 Rcvr 95
SX101 Mark III 139
SX140 Rcvr, (Novice) 59
S120 SWL Rcvr 20

HAMMARLUND

HQ110 Rcvr, **Clean** 95
HQ129X Rcvr 79
HQ 170 Rcvr, **Very Clean** 150
HQ170/VHF 2Mtrs, **Clean** 265
HQ170/180 Noise Blanker 35

MISC. EQUIPMENT

RME 6900 Rcvr 10/80 139
HAM TV Complete 235
SB2LA Linear, **Like New** 189

HEATHKIT

SB300 Rcvr, 3 Filters $189
SB400 Xmtr, **Clean** 195
HW32 20 Mtrs, **Clean** 85
HX10 AM Xmtr SSB 125
HR10 Rcvr (Novice) 55
MR1&MT1 Combo, **Works OK** 75
DX60A Xmtr (Novice) 50
DX60B Xmtr (Novice) 69

JOHNSON

Johnson KW Match Box 95
Johnson Ranger II 125
Johnson 6&2 Converter 29

NATIONAL

NC155 Rcvr, **Clean** 99
NCL2000 Linear 325
NC183D Rcvr, **Clean** 139
NCX3, **Very Clean** 150
NCX AC Supply 59
NCX DC Supply 75

SWAN

Mark II Linear 539
500C Used, **Like New** 399
500 Used, **Very Clean** 339
350 Used, **Fine Shape** 289
260 Displayed, **New** 379
240 **Nice Mobile** 149
120 **Great Standby** 85

TWO & SIX METERS

Ameco TX62, **Clean** 109
Gonset Comm-4, 2Mtrs 185
Hallicrafter SR42 2Mtrs 119
VHF 126 RME 39
Clegg Apollo 6 Lnr 165
Heath HW17 2Mtrs 99
Heath 2'R, **"As Is"** 25
Heath HW10 6Mtrs 99
Clegg 99'R 6Mtrs 85
Poly Comm 6Mtrs 119

C.B. EQUIPMENT

Johnson 350 SSB, **Special** $149
Johnson 320 Reg $199 175
Johnson 323 Reg 239 199
Johnson 123 Reg 179 149
Johnson 223 Reg 209 179
Johnson 100 Reg 129 99
Johnson III Reg 159 135

MIDLAND C.B.

Midland 23Ch#13 875 B&M 149
Midland 5W 6Ch Hand Held 75
Midland 6Ch 5W #13855 69
Midland 23Ch Integrated 120
Midland 23Ch SSB&AM, **New** 299
Midland 23Ch AM #13890 120

HYGAIN C.B. ANTENNAS

CLR/2 5/8 Wave Base 29
SDB10 Stack Fives DX'R 135
SDB6 Stack Threes 75
SDB4 Stack Twos 45
QUAD #574 2/Ele Hor/Ver 65
QUAD "BIG GUN", **Hot!** 125
5/Ele "Long John" 9.7DB 44
3/Ele CB3 Beam 6.8DB 25
"Golden Rod Base Ant" 19
Economy Base - 1/4 Wave 11
Half/Wave Base, CBV 24
Balun Ferrite, BN27A 12
Hygain "On/The/Air" Lite 8
Hygain Dummy Load 2

ACCESSORIES

Mobile Linear 200 Watts 149
Base Linear AMP 200 Watts 119
500 Watt Base Linear 235
1000 Watt Base Linear 375
2000 Watt Base Linear 695
Drake 2000 Wattmeter 47
Galaxy 3000 Wattmeter 65
GD104 Mike w/Stand 28
Turner plus Base Mike 28
Turner 454X Crystal Mike 18
BTI Linear LK/2000, **New** 679

CALIF. SALES TAX 5% - FREIGHT F.O.B.
PRICES SUBJECT TO CHANGE WITHOUT NOTICE

HAL DEVICES

A new concept in IC keyer design. You devise your own keyer, choose all the features you want, pay only for the features you order. Wired, tested, guaranteed to meet your specifications. Post paid.

The 25 keyer with 02 monitor, power supply and 364 cabinet.

- ☐ **25T Keyer.** . .8-50 wpm range, grid block keying (150v max), requires 3 vdc $13.00
- ☐ **25R Keyer.** . .25 Keyer with relay output, requires 3 vdc $14.00
- ☐ **04 Memory.** . .dot memory for 25 Keyer $ 3.00
- ☐ **10 Iambic.** . .squeeze keying for 25 Keyer $ 2.00
- ☐ **02 Monitor.** . .2¼" speaker, tone and volume controls, requires 3 vdc $ 4.00
- ☐ **364 Designer Cabinet.** . .all necessary hardware $ 5.00
- ☐ **Power Supply.** . . for 25 Keyer and/or monitor $ 8.00

HAL DEVICES

P.O. Box 365H
Urbana, Ill.
61801

ALSO AVAILABLE

- ☐ Fairchild 8 pin epoxy micrologic IC's, 900, 914 - 60¢ ea. 923 - 90¢ ea.
- ☐ Designer Cabinets — $2.85 to $5.95 write for details

YOUR HEADQUARTERS FOR THE FINEST NEW EQUIPMENT HAS EXCELLENT USED GEAR ALSO

STELLAR USED GEAR SAMPLER

DRAKE		**HAMMARLUND**		**TMC**	
T4XB	$349.00	SP600	$349.00	GPR 90 W/spkr	$219.00
T4X	295.00	HQ170	169.00	**NATIONAL**	
AC4	70.00	**COLLINS**		NC200	259.00
R4B	349.00	32S1	385.00	NCX5 II	359.00
MS4	10.00	75S3	425.00	NCX I	319.00
R4A	295.00	75A4	395.00	NCX5 AC	75.00
L4	525.00	75A4 3 filters	450.00	NC303	199.00
HALLICRAFTERS		**CLEGG INTERCEPTOR**		NC300	169.00
SR400 W/AC	750.00	W/All Bander		**SQUIRE SANDERS**	
HT32A	195.00	Rackmount	249.00	SS1R/SS1S	425.00
SX115	325.00				

Subject to Prior Sale. No Trade — Shipping Pre-paid Prices. Write for Our Trade Prices.

See GLEN FADDEN, W2CXX/2
or a member of his staff at

stellar industries
DIV. OF STELLAR I, Inc.
SALES AND SERVICE

10 GRAHAM ROAD WEST, ITHACA, N. Y. 14850 · TELEPHONE 607 - 273-9333
Your Central New York headquarters for new and used ham gear

HOURS: 9:00 A.M. to 5:30 P.M. Monday through Friday 9:00 A.M. to 5:00 P. M. Saturday

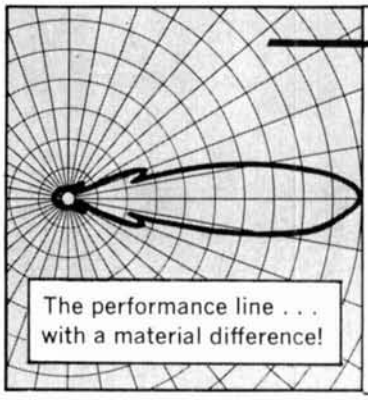

telrex

PREFERRED AND SPECIFIED WORLD-WIDE BY COMMUNICATION ENGINEERS AND ADVANCED AMATEURS

Don't settle for anything less than the very best! Use Telrex Communication products — for long lasting optimum performance and value!

FREE . . . Tech data and pricing catalogs describing off-the-shelf and custom-built antennas, systems, "Inverted-vee kits"®, towers, mono-poles and rotable "Berthas".

For commercial and military applications write for CM69 . . . for amateur applications write for PL69.

COMMUNICATION SYSTEMS SINCE 1921 — Communication Engineering **telrex** Laboratories

ASBURY PARK, NEW JERSEY 07712, U.S.A.

radio amateur **callbook**

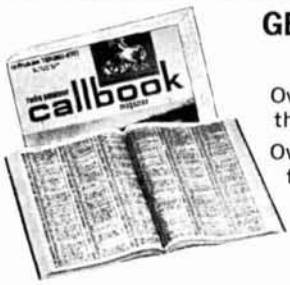

GET YOUR NEW ISSUES NOW!

Over 290,000 QTHs in the U.S. edition **$7.95**

Over 140,000 QTHs in the DX edition **$4.95**

NEW EDITION EVERY:
MARCH 1 — SEPT. 1
JUNE 1 — DEC. 1

These valuable EXTRA features included in both editions!

- **QSL Managers Around the World!**
- **Census of Radio Amateurs throughout the world!**
- **Radio Amateurs' License Class!**
- **World Prefix Map!**
- **International Radio Amateur Prefixes**
- **Radio Amateurs' Prefixes by Countries!**
- **A.R.R.L. Phonetic Alphabet!**
- **Where To Buy!**
- **Great Circle Bearings!**
- **International Postal Information!**
- **Plus much more!**

See your favorite dealer or order direct (add 25¢ for mailing in U.S., Possessions & Canada. Elsewhere add 50¢).

WRITE FOR FREE BROCHURE!

RADIO AMATEUR **callbook** INC.

Dept. E. 925 Sherwood Drive
Lake Bluff, Ill. 60044

LATEST ARCTURUS SPECIALS

- **Color focus rectifiers, 14,000 P.I.V. at 1 MA, 99¢ each. 6.5 KV — 79¢.**
- **Color TV yokes 70° and 90° types. Fit almost all sets: $9.95 each.**
- **1700 Transistor types — 39¢ each.**
- **DS-501, 2N278 power transistor types. Cat. #349, 69¢ each.**
- **HEP170, Motorola HV/Current silicon rectifiers, 2.5 amps at 1,000 P.I.V., 49¢ each.**
- **Fully transistorized UHF tuners. Fit most sets. Cat. #UHF567. $4.95 ea.**
- **UHF tuners, 1 tube type. Fit most sets. Cat. #UHF3, $3.95 each.**

Complete listings of electronic items at similar bargain prices are available. Write for our latest catalog. Minimum order $5.00, plus postage.

ARCTURUS ELECTRONICS

CORP.

502-22nd ST., UNION CITY, N. J. 07087
Dept. HR
Phone 201 - UN 4-5568

LEARN CODE *THE EASY WAY!*

REELS and CASSETTES

Speeds:

A—3 wpm to 6 wpm
B—5 wpm to 8 wpm
C—6 wpm to 10 wpm
D—10 wpm to 16 wpm
E—16 wpm to 25 wpm

Up to 40 wpm on request.

Prepare for a career in telegraphy, merchant marine, aviation, army, navy, air force, or ham operator.

PERFECT CODE TRANSMITTED FROM YOUR TAPE RECORDER. LEARN OR IMPROVE — EVEN WHILE IN YOUR CAR.

SEND CHECK OR MONEY ORDER
(Fla. residents add 4% sales tax)
State speed(s) desired.

Reels $4.95-Any two $ 8.95
Cassettes $5.95-Any two $10.95

TAPECO

TAPCO 1900 S. Ocean Drive • Fort Lauderdale, Florida 33316

"For that Personal Service and a Good Deal"
SEE AL
at Crabtree's Amateur Center in Dallas
FOR THE NEW GALAXY LINE

"HOT," Husky, and Handsome!

UP TO 90 DAYS SAME AS CASH IN OUR HOUSE — — —
OTHER ARRANGEMENTS AND TERMS AT THE LOWEST RATES.
WE NEED YOUR EQUIPMENT ON TRADES! MAIL ORDERS PROMPTLY FILLED.

CALL, COME SEE OR WRITE
AL MARKWARDT, W5PXH, MANAGER

CRABTREE'S AMATEUR CENTER
2608 ROSS AVE., DALLAS, TX. 75201, 748-5361

VHF FM MONITOR RECEIVER

NEW

100% MADE IN U.S.A.

Only $69.95 Postpaid in the U.S.A.

The new **VANGUARD FMR-150** is not just another frequency converter but a complete FM receiver with outstanding performance.

Check the following features and see why it's the best. Collins IF filter for separating those closely spaced stations you hear together on other sets ● Double conversion to eliminate interference from image frequencies ● Dual Gate MOSFET RF stage for low noise, .2uv. sensitivity, and minimum cross modulation ● Automatic squelch for eliminating noise ● Self-contained speaker ● Operates on 12v. D.C. negative ground ● Heavy gauge anodized aluminum case 6" x 7" x 1⅜" ● Provision for 4 crystal controlled channels at the push of a button ● One channel of your choice supplied with receiver. Additional channels available just by plugging in another crystal at $4.95 ea. No need to buy another RF unit as in some other sets ● Factory tuned to cover any 6MHz segment from 135 to 175 MHz.

HOW TO ORDER: The **VANGUARD FMR-150** is available only direct from our factory. Include remittance in full plus sales tax if you reside in N. Y. Be sure to state the 6MHz segment you will want to cover and the exact push button frequencies to be included.

VANGUARD LABS Dept. R, 196-23 Jamaica Ave., Hollis, N. Y. 11423

NEED CRYSTALS?

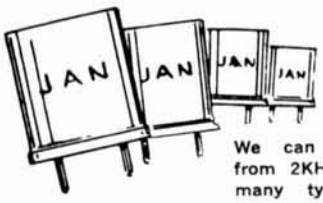

48 Hr. DELIVERY

We can supply crystals from 2KHz to 80 MHz in many types of holders.

SPECIALS

Color TV crystal (3578, 545KHz) wire leads	$1.60	4 for $5.00
100KHz frequency standard crystal (HC13/U)	4.50	
1000KHz frequency standard (HC6/U)	3.50	
Any CB crystal transmit or receive	2.25	
Any amateur band crystal (except 80 meters)	1.50	4 for $5.00
Any marine frequency (HC6/U)	2.85	
80 meter crystals in FT243 holders	2.50	

We have in stock over six million crystals which include types CR1A/AR, FT243, FT241, MC7, FT249, HC6/U, HC13/U, HC25/U, HC18/U, etc. Send 10¢ for our 1970 catalog with oscillator circuits, listing thousands of frequencies in stock for immediate delivery. (Add 10¢ per crystal to above prices for shipment 1st class mail, 15¢ each for air mail).

JAN CRYSTALS

Special Quantity Prices to Jobbers and Dealers.

ORDER DIRECT with check or money order to

2400 Crystal Drive
Fort Myers, Florida 33901

Pro-key Kit

Send perfect morse code — from 5 to 50 words per minute. Excellent to build up your code speed — anyone can send practice code.

- Self-completing characters with automatic character spacing.
- Precision kit includes all parts, such as metal case and printed circuit boards, and detailed, illustrated instructions.
- Pre-assembled keyboard with standard typewriter key arrangement and spacing.
- Special characters included, such as AR, SK, BT, period, comma, question mark, slant bar.
- Self-contained battery operated — two standard "D" cells. All solid state.
- Built-in sidetone and speaker, fast acting relay output.

10"W. 2½"H. 7½"D. **$149.50 Price (incl. shipping)**

Micro-Z Co.

Box 2426 Rolling Hills, Calif. 90274

Radio Amateurs Reference Library of Maps and Atlas

WORLD PREFIX MAP — Full color, 40" x 28", shows prefixes on each country . . . DX zones, time zones, cities, cross referenced tables . . . . . postpaid **$1.00**

RADIO AMATEURS GREAT CIRCLE CHART OF THE WORLD — from the center of the United States! Full color, 30" x 25", listing Great Circle bearings in degrees for six major U.S. cities; Boston, Washington, D.C., Miami, Seattle, San Francisco & Los Angeles. . . . . postpaid **$1.00**

RADIO AMATEURS MAP OF NORTH AMERICA! Full color, 30" x 25" — includes Central America and the Caribbean to the equator, showing call areas, zone boundaries, prefixes and time zones, FCC frequency chart, plus informative information on each of the 50 United States and other Countries . . . postpaid **$1.00**

WORLD ATLAS — Only atlas compiled for radio amateurs. Packed with world-wide information — includes 11 maps, in 4 colors with zone boundaries and country prefixes on each map. Also includes a polar projection map of the world plus a map of the Antarctica — a complete set of maps of the world. 20 pages, size 8¾" x 12" . . . . . postpaid **$2.00**

Complete reference library of maps — set of 4 as listed above . . . . . postpaid **$3.00**

See your favorite dealer or order direct.

WRITE FOR FREE BROCHURE!

RADIO AMATEUR **callbook** INC
Dept. E. 925 Sherwood Drive
Lake Bluff, Ill. 60044

GEM-QUAD FIBRE — GLASS

ANTENNA FOR 10, 15, and 20 METERS.

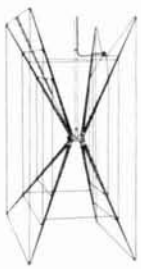

Two Elements $77.73
Extra Elements $45.00 ea.
Shipped Freight Collect
INCLUDES U.S. Customs Duty

KIT COMPLETE WITH
- **SPIDER**
- **ARMS**
- **WIRE**
- **BALUN KIT**
- **BOOM WHERE NEEDED**

SEE OUR FULL PAGE IN JUNE ISSUE

Buy two elements now — a third and fourth may be added later with little effort.

Enjoy optimum forward gain on DX, with a maximum back to front ratio and excellent side discrimination.

Get a maximum structural strength with low weight, using our "Tridetic" arms.

MANITOBA DESIGN INSTITUTE AWARD WINNER

Structural Glass LIMITED

20 Burnett Avenue, Winnepeg 16, Manitoba, Canada

NOW..... A LOG BOOK TO COMPLEMENT THE MODERN AMATEUR STATION

A new concept in station log books for the *serious amateur* – designed and published by serious amateurs with the side band operator primarily in mind. Enough space to enter sixteen or more calls on each Q.S.O. – Ideal for Round-table – Net or Mars operations. Seventeen seperate group entries on each page – 150 pages – enough log book for 18 months use for the average operator. Log complies fully with latest F.C.C. regulations, a copy of which is printed on the front inside cover.

Each page is printed in two colors – slot perforated and punched for binding. A hard back permanent binder with index sheet is furnished with each log book. Pages may be removed and filed as they are used or removed and transferred to a clip board for mobile operation.

Log books will be shipped post paid upon receipt of check or money order for $3.85.
Address your orders to:

EAST TEXAS PHOTOCOPY COMPANY, INC.

P. O. BOX 59 TYLER, TEXAS 75701

TAKE YOUR PICK

These units will replace the 100 kHz calibrator built into most receivers. Using your 100 kHz crystal this unit will provide sharp accurate markers with readouts at 100 - 50 - 25 - 10 and 5 kHz usable thru 50 MHz. Keep your receiver calibrated at all times, locate sub bands, MARS frequencies and band edges.

or

CIRCUIT BOARD

Glass epoxy board
Adjustment to zero beat with WWV
Uses 100 kHz crystal (not supplied)
3 to 4 VDC at approximately 75 ma — 2 "D" size batteries
Compact — 1.75 x 3.75 inches — Install anywhere
Complete easy-to-assemble kit $16.50 **Wired and Tested $19.95**
These prices postpaid USA less crystal & batteries

SELF-CONTAINED UNIT

The TBL 1 Marker is a complete unit including the circuit board shown at left and powered with 3 "C" type flashlight batteries. Merely connect to your receiver antenna — no internal wiring necessary. A front panel control allows zero beat with WWV.

Special introductory price Less crystal and batteries $29.95
Add $1.00 postage and handling USA
SOLD WITH MONEY BACK GUARANTEE

THE RADIO SHOP, LAB 1

48 ELM STREET, NEW CANAAN, CONN. 06840 — Tel. 203-966-3553

NEW!

FMT-1

5 Watt 6 Channel

All Solid State 2 Meter

FM TRANSCEIVER

12-15 Volt Operation
142-149 MHz with 1 MHz maximum spread
Receiver sensitivity .3 microvolt for 20 db quieting
Dual Conversion
Mechanical Filter for sharp 28 KHz bandwith
5 watt RF minimum power output
6 Channels - One set crystals for operation 146.34-146.94 supplied
Adjustable 5 to 15 KHz deviation
Ready to operate - Just connect to 12 volts and an antenna

$289.95 FOB DENVER

— Certified Check or Money Order please —

Including mobile mount & dynamic microphone

Extra transmit or receive crystals $7.00 each order from

VHF Associates, Incorporated

P. O. BOX 22135, DENVER, COLO. 80222

STATEMENT OF OWNERSHIP, MANAGEMENT AND CIRCULATION

(Act of October 23, 1962: Section 4369, Title 39 United States Code)

Publisher: File two copies of this form with your postmaster. Postmaster: Complete certification on page 2.

Form Approved. Budget Bureau No. 46-R019

1. DATE OF FILING: Sept. 29, 1969	2. TITLE OF PUBLICATION: HAM RADIO MAGAZINE
3. FREQUENCY OF ISSUE: MONTHLY	
4. LOCATION OF KNOWN OFFICE OF PUBLICATION (Street, city, county, state, ZIP code):	MAIN STREET, GREENVILLE, N.H. 03048
5. LOCATION OF THE HEADQUARTERS OR GENERAL BUSINESS OFFICES OF THE PUBLISHERS (Not printers):	MAIN STREET, GREENVILLE, N. H. 03048
6. NAMES AND ADDRESSES OF PUBLISHER, EDITOR, AND MANAGING EDITOR	
PUBLISHER (Name and address):	T. H. TENNEY, JR., MAIN ST. GREENVILLE, N. H. 03048
EDITOR (Name and address):	J. R. FISK, MAIN ST., GREENVILLE, N. H. 03048
MANAGING EDITOR (Name and address):	

7. OWNER (If owned by a corporation, its name and address must be stated and also immediately thereunder the names and addresses of stockholders owning or holding 1 percent or more of total amount of stock. If not owned by a corporation, the names and addresses of the individual owners must be given. If owned by a partnership or other unincorporated firm, its name and address, as well as that of each individual member, must be given.)

NAME	ADDRESS
COMMUNICATIONS TECHNOLOGY, INC.	MAIN STREET, GREENVILLE, N.H. 03048
T. H. TENNEY, JR.	MAIN STREET, GREENVILLE, N.H. 03048

8. KNOWN BONDHOLDERS, MORTGAGEES, AND OTHER SECURITY HOLDERS OWNING OR HOLDING 1 PERCENT OR MORE OF TOTAL AMOUNT OF BONDS, MORTGAGES OR OTHER SECURITIES (If there are none, so state)

NAME	ADDRESS
T. H. TENNEY, JR.	MAIN STREET, GREENVILLE, N.H. 03048

9. FOR COMPLETION BY NONPROFIT ORGANIZATIONS AUTHORIZED TO MAIL AT SPECIAL RATES (Section 132.122, Postal Manual) (Check one)

The purpose, function, and nonprofit status of this organization and the exempt status for Federal income tax purposes: ☐ Have not changed during preceding 12 months ☐ Have changed during preceding 12 months (If changed, publisher must submit explanation of change with this statement.)

10. EXTENT AND NATURE OF CIRCULATION	AVERAGE NO. COPIES EACH ISSUE DURING PRECEDING 12 MONTHS	ACTUAL NUMBER OF COPIES OF SINGLE ISSUE PUBLISHED NEAREST TO FILING DATE
A. TOTAL NO. COPIES PRINTED (Net Press Run)	22,532	26,772
B. PAID CIRCULATION: 1. SALES THROUGH DEALERS AND CARRIERS, STREET VENDORS AND COUNTER SALES	7,295	8,175
2. MAIL SUBSCRIPTIONS	13,001	17,945
C. TOTAL PAID CIRCULATION	20,296	26,522
D. FREE DISTRIBUTION (including samples) BY MAIL, CARRIER OR OTHER MEANS	1,239	402
E. TOTAL DISTRIBUTION (Sum of C and D)	21,535	26,522
F. OFFICE USE, LEFT OVER, UNACCOUNTED, SPOILED AFTER PRINTING	997	250
G. TOTAL (Sum of E & F—should equal net press run shown in A)	22,532	26,772

I certify that the statements made by me above are correct and complete. (Signature of editor, publisher, business manager, or owner)

PS Form 3526 Nov 1968

WORLD QSL BUREAU

5200 Panama Ave.
Richmond, Calif. U.S.A. 94804

PLAN 1

We forward your QSLs (please arrange alphabetically) to or within U. S. A., Canada and Mexico for 3¢ each, and to all other places in World for 4¢ each.

PLAN 2

You use our special log form and send us a copy. We supply QSL — make out QSL — deliver QSL, all for 8¢ each.

WRITE FOR FREE INFORMATION SHEET

ELECTRONIC MAIL ADVERTISER

published by W ∅ Bargains Galore, is the fastest, most readable listing of electronic bargains. Twice a month, 7¢ a word, based on 2 insertions. For a free sample send your QTH to ELECTRONIC MAIL ADVERTISER, 1949 Van Reek Lane, St. Louis, Mo. 63131.

THE NEW "*BOOMERANG II*" 80-40 METER TRAP ANTENNA

ALL STAINLESS STEEL HARDWARE

RUN FULL LEGAL POWER

INSTRUCTIONS SUPPLIED

104 Ft. LONG

IDEAL NOVICE ANTENNA

LIGHT WEIGHT ONLY 4 oz. PER TRAP

MAY BE USED WITHOUT BALUN BUT 1:1 BALUN IS RECOMMENDED FOR BEST PREFORMANCE

DEALER INQUIRIES INVITED | LITERATURE ON REQUEST

PRICE:		
	AB-1 1:1 BALUN	$10.95 PPD
	ATH TRAPS PAIR	$12.95 PPD
ATH TRAPS AND AB-1 BALUN		$22.95 PPD

ORDER FROM: *M. WEINSCHENKER K3DPJ*
BOX 353
IRWIN, PA. 15642

REVIEWED IN DECEMBER, 1968 HAM RADIO

the permaflex key

- both a twin lever & straight hand key in a pivotless 2 paddle design.
- gives instant choice of automatic semi-automatic & straight hand keying.
- use directly with any transmitter or through an electronic keyer.
- 8 amp. gold diffused silver contacts adjust from 0-.060" & 5-50 grams.
- distinctive blue paddles are of rugged G-10 fiberglass epoxy.
- cabinet is 16 gauge polished chrome steel: 1.95" sq. x 3.75", paddles extend 1.25", weight app. 1 pound.
- silicone rubber feet for stability.
- 100% US made & guaranteed for 1 yr.

19.95 complete, ppd use & can. send a check or m.o. sold by mail only

James Research company, dep't: HR-K
20 willits rd., glen cove, n.y. 11542

WE PAY HIGHEST
PRICES FOR ELECTRON
TUBES AND SEMICONDUCTORS

H & L ASSOCIATES
ELIZABETHPORT INDUSTRIAL PARK
ELIZABETH, NEW JERSEY 07206
(201) 351-4200

Don't Forget!

HAM RADIO
BINDERS $3.95

HAM RADIO
BOUND VOLUMES
Volume 1, 1968 $14.95

Order from
HAM RADIO MAGAZINE
GREENVILLE, N. H. 03048

WE PAY CASH FOR TUBES
LEWISPAUL ELECTRONICS INC.
303 W. Crescent Avenue
Allendale, New Jersey 07401

W2AU BALUN LETS ENTIRE ANTENNA RADIATE!

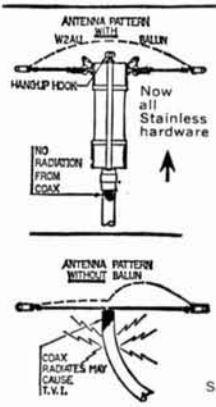

STOP WASTING YOUR SIGNAL! REMEMBER, YOUR ANTENNA IS THE MOST IMPORTANT PIECE OF GEAR YOU OWN.

- No Radiation from Coax
- No Center Insulator Needed
- Perfect for Inverted Vees (Use Hang-up Hook)
- Built-in Lightning arrester
- Broad Band 3 to 40 mc.
- Takes Legal Power Limit and then some
- Two Models:
  1:1 50 ohm coax to 50 ohm balanced
  4:1 75 ohm coax to 300 ohm balanced
  A must for Inverted Vees, Doublets, Quads, Yagis and Multiple Dipoles.

$12.95 AMATEUR NET

See QST and May 73 for more details

W2AU Complete pretuned Fiberglas Quad $99.95
W2AU Complete pretuned Vinyl Quad $64.95

UNADILLA RADIATION PRODUCTS
Unadilla, N. Y. 13849 607-369-2985

BRIDGE THE GAP TO PEAK PERFORMANCE

. . . . through either of these antenna noise bridge units, which provide accurate and fast testing of antennas and feed lines at a reasonable cost.

Model TE 7-01
- Antenna Noise Bridge
- Range — 1 to 100 MHz
- RCA Tip Jacks
- Resistance Testing: 0 — 100 ohms

$24.95

Model TE 7-02
- Extended Range Antenna Noise Bridge
- Range — 1 to 300 MHz
- BNC Connectors
- Resistance Testing — 0 to infinity, calibrated 25-100 ohms

$34.95

Features Applicable to Both Models:
- Test antenna for both resonant frequency and impedance.
- Replace VSWR bridges or other antenna test equipment.
- Optimum performance through alignment and test of mobile or fixed station antennas.
- Test beams, whips, dipoles, quads, or complete tuner systems.

Applications data and operating instructions included. For descriptive literature write:

omega-t systems incorporated

300 TERRACE VILLAGE · RICHARDSON, TEXAS 75080
(214) 231-5121

WE WANT SP-600-JX(*) RECEIVERS

Will pay $250 laid in with original cabinet, $200 if less cabinet but will deduct what it costs to align and/or repair to excellent condition (usually runs no more than $35). No deductions if no work needed.

REGUL. PWR SPLY FOR COMMAND, LM, ETC.:

PP-106/U: Metered. Knob-adjustable 90-270 v up to 80 ma dc; also select an AC of 6.3 v 5A, or 12.6 v 2 1/2 A or 28 v 2 1/2 A. With mating output plug & all tech. data. Shpg wt 50# **19.50**

BARGAINS WHICH THE ABOVE WILL POWER:

LM-(*) Freq. Meter: .125-20 MHz, .01%, CW or AM, with serial-matched calib. book, tech data, mating plug. Checked & grtd. 57.50
TS-323 Freq. Meter: Similar to above but 20-480 MHz, .001%. With data 169.50
A.R.C. R11A: Modern Q-5'er 190-550 KHz 12.95
A.R.C. R22: 540-1600 KHz w/tuning graph 17.95

HI-SENSITIVITY UHF RECEIVER:

375-1000 MHz. Stoddart RFI Meter NM-50A with pwr sply, cords, dipole holder, 3 dipoles. Sensit. as a 2-terminal tuned voltmeter is 10 uv. Less the voltage-attenuation Calibration charts so we will sell it as a simple receiver in grtd-ecel. condition for only **275.00**

ULTRA-WIDE-BAND RECEIVER:

AN/ALR-5: Late postwar AM/FM Countermeasures rcvr. Has S-Meter; variable IF Atten. & passband (0.2 or 2 MHz from 30 MHz center); AF. Video & Pan. outputs. New, modified for 120 v 60 Hz. Includes new (Method II pack) 4-band plug-in converter .038-1 GHz. 4 Type-N plugs automatically select correct ant. as bands are switched. Sensit. at -6 db setting: 6½ uv thru 132 MHz, 13 thru 780 MHz & 45½ at 1 GHz. BRAND NEW, with book & mating pwr-input plug, only **275.00**

Versatile Plate & Filam. Transformer:

Depot Spares for SP-600-JX: Pri. 95/105/117/130/190/210/234/260 v 50/60 Hz. Sec. 1: 305-0-305 v, 150 ma. Sec. 2: 5 v 3A. Sec. 3: 6.3 v 5 A. Sec. 4: 7 1/2 v, 3/4 A. Sec. 5: 7 1/2 v, 1 1/4 A. Legend for pins is plainly marked. Herm. sealed. Shipping wt. 13 lbs. **2.95**

FOUND! A NEAT & COMPACT SCOPE XFRMR!

Freed 12691: DAS Loran Spares, supplied 5" CR, plates & htrs. Pri. 105-130v 50/60Hz. Sec's insul. 5 kv: 1490 & 1100 v, 5 ma; 390-0-390 v 100 ma; electrostatically-shielded 6.3 v, 0.8 A; two 2 1/2 v, 2 A. Sec's insul. 1 1/2 kv: two 6.3 v, 6 A; 5 v, 3 A; 2 1/2 v, 5A. Case 5 1/4 x 5 x 7 1/4. With diagram. Shipping wt. 23 lbs. **2.95**

FAIRCHILD SOLID-STATE SCOPES all w/dual-trace plug-ins 25 & 50 MHz, w/delayed time-base plug-ins, w/books, overhauled & grtd. As low as **825.00**

WE PROBABLY HAVE THE BEST INVENTORY OF GOOD LAB TEST EQUIPMENT IN THE COUNTRY. BUT PLEASE DO NOT ASK FOR CATALOG! ASK FOR SPECIFIC ITEMS OR KINDS OF ITEMS YOU NEED! WE ALSO BUY! WHAT DO YOU HAVE?

R. E. GOODHEART CO. INC.
Box 1220-HR, Beverly Hills, Calif. 90213
Tel: Area 213, office 272-5707, messages 275-5342

Antennas Towers Rotators
New Used Surplus

We are a member of the Jennings Diode Bank.
Contact us for any diode.
Service ½ amp to 1000 amp any voltage.

HY GAIN · HUSTLER · MOSLEY · EZ WAY
TRI-EX · ROHN · VESTO · MYLAR
ROPE · CDR, Etc.

One piece or a complete antenna system
Also dealing in surplus
Write for latest catalog

ANTENNA MART
BOX 7 · RIPPEY, IOWA 50235

REVIEWED IN MARCH, 1968 HAM RADIO

mark 2 oscillator/monitor

- makes an audible tone to monitor the RF of any CW transmitter from 10Mw to 1 Kw & 100Kc to 1000Mc, using only an 8" pickup antenna.
- can be self-triggered for code practice or the testing of solid state components and circuits.
- aids in tuning up & testing RF oscillator and power circuits.
- 4 transistor, 2 diode circuit, speaker, tone adjust, AA pencell, test leads, 8" ant., & magnetic base.
- cabinet is 16 gauge black & clear anodised aluminum, 3.4 x 2.3 x 1.2" US made & guaranteed for 1 year.

14.95 complete, ppd usa & can. send a check or m.o. sold by mail only

James Research company, dep't: HR-M
20 willits rd., glen cove, n.y. 11542!

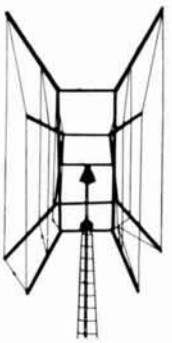

The POPULAR 2 element Joga Quad for 10-15-20. Now distributed state side for your convenience. Write for further information to:

GUARANTEE
RADIO SUPPLY CORPORATION
1314 Iturbide Street
Laredo, Texas · RA 3-6913

TEXAS TECHNICAL PRODUCTS
Route 2, Box 324-D
San Antonio, Texas 78228
Phone (512) 695-8430

PRODUCTOS **JOGA**

CALLE 50 X 45 NUM. 431
MERIDA, YUC., MEX.

NOVICE CRYSTALS

Fundamental frequencies in FT-243 holders. Pin size .093 in., spacing .486 in. Tolerance .03% measured in oscillator with 32 mmfd. capacity.

80 meters 3705-3745 kc. $1.75 ea.
40 meters 7155-7195 kc. 1.25 ea.
15 meters 7034-7082 kc. 1.25 ea.

Add for postage and handling per crystal: 8c first class; 12c airmail. Specify frequency desired and nearest available will be sent. Other frequencies in stock. Send for free list. Satisfaction guaranteed.

NAT STINNETTE, P. O. Drawer Q-1, Umatilla, Fla. 32784

BARRY PAYS CASH FAST

You can be sure with Barry . . .
Fair dealing since 1938

Send lists of your unused TUBES, Receivers, Semi-Conductors, Vac. Variables, Test Equipment, etc.

No Quantity too Small.
No Quantity too Large.

Write or Call now . . . BARRY, W2LNI

BARRY ELECTRONICS
512 BROADWAY • NEW YORK, N. Y. 10012
212 · WA 5-7000

CRYSTAL CALIBRATOR 100 KC to 25 KC

K100C-2 100 KC CRYSTAL CALIBRATOR. First P. C. board kit contains components for 100 KC output. The output of this little unit is really very stable, ± .005% or better at 100 KC. Voltage requirement is 4.5V DC (3 — 1½ V flashlight batt.). Complete with crystal, integrated circuits and all components. ONLY $4.95

K100C-2A Contains two P. C. boards with components of Kit No. 1 and has additional components to deliver outputs of 50 KC & 25 KC band edge markers. Complete Kit K100C-2A will deliver stable harmonic-rich outputs of 100 KC, 50 KC, and 25 KC band edge markers. Units deliver a square wave which gives useful harmonics up to 50 MC. ONLY $7.95

ASSEMBLE IN 5 MINUTES

UTC-S20 TRANSFORMER 55 watts Universal modulation complete with connection chart. $3.49
12 V 5 A. w/Breaker $3.00

CHICAGO STANDARD TRANSFORMER

P-6013 Primary 117 VAC 60 cyc Sec. 350-0-350 at 120 MA. 6.3 V CT — 4.7 Amp 5 V CT — 3 Amp. NEW $2.95

SQUIRREL CAGE BLOWERS

Very, very quiet 75 CFM 3 x 4 x 4 —115V 60 cyc. NEW $5.95

COPPER P.C. BOARDS

R & R DOZEN (13) FOR PRICE of twelve.	2" x 2"	15¢	ea.
	3" x 6"	35¢	ea.
	4" x 6"	45¢	ea.
	12" x 12"	$2.25	ea.
ETCHING SOLUTION		99¢	Pt.
RESIST PAINT		75¢	Bt.

INTEGRATED CIRCUITS

New straight from factory Fairchild I.C.'s UL 914 with 30 projects. Diagrams 80¢ ea., 10/$7.50 100/$65.00

UL 923 J.K. flip flop with spec. sheet. $1.50 ea. 10/$13.50 100/$110.00

STEREO HEADPHONES

High fidelity stereophonic headphone model SH-1 freq. range 25-15,000 C/S 8-16 ohm weight 350 gr. Retail price of these beauties $12.95
R & R price new $6.95

Two Locations

R & R ELECTRONICS
311 EAST SOUTH ST.
INDIANAPOLIS, IND. 46225
R & R ELECTRONICS
1953 S. Yellowsprings
SPRINGFIELD, OHIO 45506

Please refer all mail order to Ohio store.

LOW PRICE, QUALITY, COAXIAL SWITCHES . . .

Don't pay for the 5th and 6th position. The average HAM rarely uses more than 4!

SPECIFICATIONS: Silvered Contacts. Write-on ERASABLE escutcheon plate. AVAILABLE EITHER 4 PST (COAX-9) OR LINEAR (COAX-LINEAR) IN-OUT VERSION. Handles 1000 W AM or 2000 W SSB. Insertion loss negligible to 160 Mc. VSWR: Less than 1.2 at 160 Mc. Size: 3¹⁄₈" dia. x 1⁵⁄₈" overall. Single hole mount. SPECIFY MODEL. $7.65 ea.

COAXIAL LIGHTNING ARRESTORS

Zero power loss. No increase in SWR at 150 Mc. Does not alternate signals. Model 210 for 1000 W (AM) or 2000 W (SSB). Model 211 Electronic static arrestor for 50 W (AM) or 100 W (SSB). SO-239 UHF type fittings. Other fittings available. Size approx. 3½" x ¾" dia. #210 $3.15 ea. #211 $4.65 ea. SPECIFY model #.

PRICES above are amateur net. Shipped ppd. in U.S.A. Send Check or M.O. (N.J. ADD 3% Sales Tax)

OTHER PRODUCTS: Feed thru capacitors. Tuned noise filters. Alternator, generator, low-pass and field filters. SEND FOR CATALOG.

"COMMUNICATION ENGINEERED"
By "HAMMIE" RICHARDT—W2WIY

ELECTRONIC APPLICATIONS CO.
ROUTE 46, Pine Brook, N. J. 07058

UHF NPN HIGH POWER TRANSISTORS
2.99 ea **400 mc**
2N3632 23W, 3A.

MICRO AMP METER $1.95

709 OPERATIONAL AMPLIFIER Sale $2.22 3 for $6

1 AMP 4000 PIV SILICON RECTIFIERS $1.69

5 — 1 AMP 1000 PIV RECTIFIERS	5 for $1
6 — 1 AMP 800 PIV RECTIFIERS	6 for
4 — 2 AMP 1000 PIV RECTIFIERS	4 for

TERMS: Add postage— ☐ CATALOG 10¢—Refund. 30 days

POLY PAKS P.O. BOX 942H LYNNFIELD, MASS 01940

USAF NAVIGATOR WRIST WATCH

These world renown 17 jeweled movements were made with exacting craftsmanship and mil-spec requirements. The watches were made by Bulova, Elgin, and Waltham with a hack mechanism by pulling the crown to stop the second hand; so the time may be set to the exact second. All are in good used condition with 24 hour luminous dial, St. St. case and expansion band.

USAF WW ..... **$20.00 p.p.**

COMPUTER GRADE GIANT CAPACITORS

These brand new capacitors are in great demand as filter capacitors for I.C. Logic Circuits, Power Supplies, etc. These will take the noise out of the most stubborn circuits, where all else fails.

Net Price is from $4.00 to $18.00 Each.

WT.	SIZE	PRICE EA.	12 FOR
2#	110,000Mf 15V	$2.00	$20.00
2#	25,000Mf 25V	1.50	15.00
2#	6,000Mf 75V	1.50	15.00
1#	4,000Mf 50V	1.00	10.00

GYRO DRIFTMETER

This Gyro Stabilized Driftmeter is the same type used to examine the inside of pipes, jet engines in action and atomic experiments from a distance. Use it as a camera stabilizer or for a Science Fair project. Focuses from 4½″ to infinity. Can be used horizontally, vertically, or at any angle. The Gyro wheel is 4″ in diameter and turns at 11,500 RPM. AC input at 400 Hz, but it will also run on 12 VDC with a 400 Hz power supply. An on-off switch and a caging provision to lock movement when required are provided. A machined mount attaches to item to be stabilized. You can use the parts to construct a slow motion, right ascension telescope drive, or for many other projects as it contains many valuable and necessary parts. A similar Gyroscopic Camera Stabilizer is selling at over $800. in camera stores. The parts that are in this device are worth far more than our low price.

4KGyro 150 ..... **$10.00 p.p.**
POWER SUPPLY KIT P.S. Gyro ..... **$2.50 p.p.**

ULTRA MINIATURE VARIABLE CAPACITOR

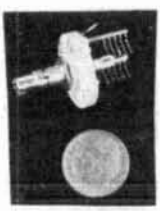

Use this high quality ceramic insulated variable for miniature receivers and transmitters. Also makes a good stable trimmer for X-tal oscillators, etc. Capacitance 2.7-20 pfd. Mfg. by Johnson. Usual price $1.75 each. New surplus.

UMVC ..... **3 for $1.00 p.p**
or ..... **25 for $2.50 p.p.**

UNIVERSAL LOGIC CIRCUIT CARDS

Instant logic!-I-I for 10 pin TO-5 or 14 lead dual in-line INTEGRATED CIRCUITS

These boards are the most useful items we have ever offered for breadboarding with low cost integrated circuits. The cards are made from 1/16″ G-10 Glass Epoxy, with pads for 14 lead dual inline mounting pads on one side and 10 lead TO-5 pads on the other. 8 lead TO-5 cans will mount in the 10 lead TO-5 pads also. Discrete transistors and components can be mounted in the locations between the I.C.'s power supply leads are already routed around the board. Our competitors charge $9.50 each for circuit card and mating connector. We give you a surplus, unused p.c. board with components on it (that you can keep for your junk box), a connector and its mate, and our great circuit card. You drill out the desired hole pattern, unsolder the connector from the surplus card and install it on the new card, wire in the I.C.'s and compute. A few minutes of your time, and you save over 80% of the cost of comparable p.c. cards. Get enough for your breadboarding needs now because these are going to go fast.

2 Cards & mating connectors 2 ICCC $ 2.50 p.p.
10 Cards & mating connectors 10 ICCC $10.00 p.p.
100 Cards & mating connectors 100 ICCC $88.00 p.p.

POOR MAN'S HI FI HEADPHONE

The Canadian Air Force has surplus also and we were fortunate to obtain over 500 headsets from them and are passing the savings on to you. They are unused and in the original cartons. The headphone elements are actually miniature speakers, as pictured. This is the way Hi-Fi phones are constructed. Will give excellent fidelity with either voice or music. They have rubber pads with chamois-type covering, metal headband, cord and plug. 4 to 16 ohm impedance for use with any radio or TV, etc., by attaching to the speaker leads. May be converted to "stereo" by making connections at each ear phone. This is a real bargain for quality RCAF head sets.

RCAFHP ..... **$3.50 p.p.**

Same headset as above, but with hand microphone with push to talk switch. Mfg. by RCA, Zenith, and others. Qty. limited only 200 pairs.

RCAFHPM ..... **$4.50 p.p.**

LOGIC FILTERS

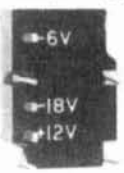

Filters for Logic Circuits made by 3 C — new surplus. They contain 3 tantalum capacitors and a zener diode in a plug-in plastic assembly. Put one of these on each logic card to eliminate noise problems. List $4.75 ea.

3CLF ..... **2 for $1.00 p.p. or 12 for $5.00 p.p.**

SEND 25¢ FOR OUR LATEST, BEST CATALOG YET, JAM PACKED WITH ELECTRONIC BARGAINS . . . FREE WITH AN ORDER . . .

BF Enterprises

P. O. BOX 44, HATHORNE, MASS. 01937

OVERSTOCK SALE

Moved too much "JUNQUE" to my new, much smaller store. So filled I can't move. Take advantage of these once in a lifetime "JUNK" prices.

All items are NEW, except (*) removed from unused military sets.

All tubes GUARANTEED to meet full factory specs, when you get, no year's guarantee.

3BP-1* $4.50; 3EP-1 $1.50; 3GP-1 $1.50; 3JP-1* $3.00; 5CP-1 $4.50; 5RP-1A $3.50

MU-METAL shields to fit —

3BP-1 $1.50; 3JP-1* $1.25; 5BP-1 $2.25; 5CP-1* $2.00

50¢ each, 6 for $2.75, mix or match

1625, 12A6, 12K8, 12AG7, 12SG7, VR-105*, 0B2*, 6V6GT*, 5U4G*, 5R4G*, 12AT7*, 6AK5*, 6AN8*, 6J4*.

TUBE ACCESSORIES — Sockets, Heat Dissipating Tube Shields

#122-237, 7 pin large ceramic wafer, fits 1625, 837 & 3AP-1 ..... **5 for $1.00 23¢ each**

49-8, ceramic octal, ring mounted, **12 for $1.00 10¢ each**

9 pin miniature, shield base ceramic, **6/$1.00 18¢ each**

Heat dissipating tube shields, to fit 7 and 9 pin sockets, 1¼" and 2" tall, **6 for $1.00 18¢ each**

VARIABLE CAPACITORS

#154-3, 19 to 488 pf, 2000v dual ¼" shafts, **4 for $15.00, $4.00 each**

12 to 151 pf, 3500v, single ¼" shafts **4 for $11.50, $3.00 each**

12 to 100 pf, 2000v, dual ¼" shafts **4 for $4.75, $1.25 each**

#21140, 140 pf, 600v, single ¼" shaft, 2 ceramic end plates 1½" sq. **6 for $4.75, 85¢ each**

85 KC IFs for BC-453, for double conversion or QO5er ..... **6 for $4.75, 85¢ each**

15 MC IFs for R28, ceramic coil form, **6 for $1.00, 18¢ each**

Crystal mike, Jap made, with ON-OFF switch, 6 foot cord ..... **6 for $4.75, 85¢ each**

Solder, EUTECTIC, 63/37 alloy, 3 ounce spool, 30 feet ..... **6 for $2.75, 50¢ each**

TEST LEADS, red & black, 60" long, 4" prod. **8 for $3.00, 40¢ each**

All prices are NET, FOB store, Chicago. PLEASE — include sufficient to cover postage.

B C Electronics

5696 NORTH RIDGE AVENUE
CHICAGO, ILLINOIS 60616

. . . Hours . . .
Wed. and Sat., 10 a.m. to 3 p.m.
Other times, by appointment

. . . Phones . . .
312-334-4463, if no answer please call 312-784-4426

Mailing Address for all orders, inquiries and correspondence: c/o Ben Cohn, 5058 North Claremont Avenue, Chicago, Illinois 60625.

THE PRICE IS RIGHT AT NOVA

WE WILL MEET OR BEAT ANY DEAL

GALAXY — NATIONAL — DRAKE

HY-GAIN — SBE — MOSLEY

TRI-EX — ROHN

NOVA ELECTRONICS

3012 ROSS AVENUE, DALLAS, TEXAS 75204

Phone 214 824-4920

Buy - Sell - Trade

MILITARY SURPLUS TEST EQUIPMENT

SG-1A/ARN, SG-2/GRM-4, SG-13/ARN, SG-66/ARM-5, MD-83A/ARN, H.P. 606A, H.P. 608D, H.P. 612A, H.P. 618D, TRM-1, ARC H-14A, COLLINS 479T-2, 479S-3. NEW HAM GEAR TO TRADE OR CASH TO BUY. WRITE, WIRE, PHONE (813) 722-1843, BILL SLEP, SLEP ELECTRONICS COMPANY, 2412 HIGHWAY 301N, ELLENTON, FLORIDA 33532.

SLEP ELECTRONICS CO.

BOX 178H, 2412 HIGHWAY 301 N.
ELLENTON, FLORIDA 33532 · PHONE (813) 722-1843

FILAMENT CHOKE

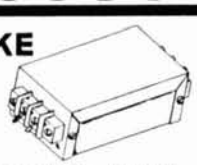

Shielded high reactance at all frequencies above 3 mc. Current capacity of 30 plus amps. Voltage drop at 21 amps is less than .15 volt. Size 2¼ wide x 1½ high x 5¼ long.

Pa. residents add 6% sales tax.

Price $7.95 ppd. U.S.A.

M. WEINSCHENKER K3DPT

BOX 353, IRWIN, PA. 15642

DEALER INQUIRIES INVITED

LIBERTY PAYS MORE!!

WILL BUY FOR CASH — ALL TYPES

Electron Tubes · Semiconductors · Test Equipment · Military Electronic Equipment

Wire, write, phone collect! We pay freight on all purchases!

LIBERTY ELECTRONICS, INC.
548 Broadway, New York, N. Y. 10012
Phone: 212/925-6000

ALL BAND TRAP ANTENNA !

Reduces Interference and Noise on ALL Makes Short Wave Receivers. Makes World-Wide Reception Stronger. Complete with 96 ft. 72 ohm feedline. Sealed resonant traps. For novice and class radio amateurs! Eliminates 5 separate antennas with better performance guaranteed. 80-40-20-10 meter bands. Complete 102 ft. $19.95. 40-20-15-10 meter bands, 54 ft. (best for world-wide short wave reception) $18.95. Send only $3.00 (cash, ck. mo) and pay postman balance COD plus postage on arrival or send full price for postpaid delivery. Complete instructions included!

For ALL Amateur Transmitters. Guaranteed for 1000 Watts Power. Light, Neat, Weatherproof.

WESTERN ELECTRONICS · Dept. B · Kearney, Nebr. 68847

COAX SWITCH

Unused coaxial switch, 12 volt coil, standard UHF fittings. Made by Allied Control. **$5.00**

LOW PASS FILTER

Brand new, w/UHF fittings, good for 100 watts, up to 30mc. 52 or 72 ohm line, attenuation min of 60 db from 35 mc thru FM & TV bands. **$4.00**

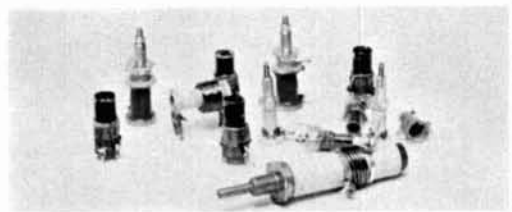

SLUG TUNED COILS

For PC board and one hole mount. Grab bag of 8 various types, ceramic, lucite, some with windings (easily removed to replace with your own). A good $5.00 value for only ..... **8 for $1.00**
..... **50 for $5.00**

$10 TRANSISTOR IGNITION $10

Complete electronic 2 transistor dual ignition system for cars, boats, trucks. Fully wired harness, dual primary coil, instant changeover from transistor to conventional or back. Neg. ground, 6 or 12 volt system. Complete with instructions, ready to install. Original price $35, now only $10.00 ppd.

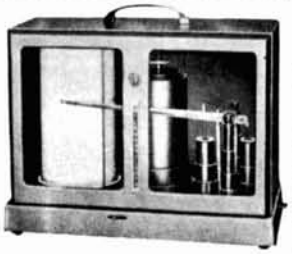

RECORDING MICRO BAROGRAPH

Surplus U. S. Air Force Bendix-Friez recording barograph. The standard instrument for U. S. Weather Bureau, armed forces, airlines. Records a full week, powered by a jeweled spring-driven clock mechanism. A valuable instrument for the yachtsman or anyone interested in weather variations. An unusual gift for "the man who has everything." These are checked out, with a year's supply of ink and charts. Should last a lifetime. Gov't. cost $367.00. Our price **$125.00** plus shipping.

IBM WIRED MEMORY FRAMES.

Removed from high priced computors. Exlnt condition.

GIANT VALUE

4,000	Wired Core Plane	$ 9.00
4,096	Wired Core Plane	$12.50
8,000	Wired Core Plane	$13.50
8,192	Wired Core Plane	$15.00
16,384	Wired Core Plane	$19.00

INTEGRATED CIRCUITS

900	Buffer	$1.00
910	Dual 2-input NOR	1.00
2-903	Dual input gate	1.00
914	Dual 2-input gate	1.00
914-925	Dual 2-input gate dual expander	1.00
923	JK flip flop	1.00
925	Dual 2-input gate exp.	1.00
946	DTL 4 2-input NAND/NOR gate	2/1.00
	DTL Clocked flip flop	2/1.00
1M5	Dual 4-input logic gate	2/1.00
7M6	6 NPN transistors in one package, gen. use	3/1.00
12M2	Diff. Amp	1.00
711	Dual Comp Amp	2.00

Above equipment on hand, ready to ship. Terms net cash, f.o.b Lynn, Mass. Many other unusual pieces of military surplus electronic equipment are described in our catalog.

Send 25¢ for catalog 69-2

JOHN MESHNA JR.

19 ALLERTON ST., LYNN, MASS. 01904
P. O. BOX 62, E. LYNN, MASS. 01904

NEW! FROM MOSLEY

Two Single-Band Beams with The Classic FEED

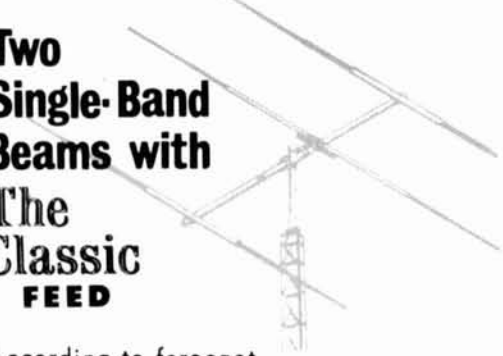

According to forecast, 1970 should be another great year for h. f. propagation conditions. Make the most of the DX openings on 10 or 15 meters with one of Two New Single-Band beams from Mosley. VALUE - QUALITY - RELIABILITY is yours with The Classic 10 (Model CL-10) or The Classic 15 (Model CL-15). These beams offer optimum spacing, possible only on single-band arrays.

Even more advantageous is their famous Classic feed System

(Pat. No. 3419872). This "Balanced Capacitive Matching" provides maximum gain, increased bandwidth and more efficient performance because of its better electrical balance and weather proof construction.

See these DX chasers at your nearest Mosley dealer. For complete specifications and performance data, write factory direct for free brochure,.

Mosley Electronics, Inc. - Dept. 197
4610 N. Lindbergh Boulevard,
Bridgeton, Missouri. 63042

Mosley Electronics, Inc.

Advertisers Index

Antenna Mart	91
Arcturus Electronics Corp.	85
BC Electronics	94
B&F Enterprises	93
Barry Electronics	91
Bob's Amateur Electronics	67
Collins Radio Co.	Cover II
Communications Technology, Inc.	71, 80
Crabtree Amateur Center	86
Dames Co., Theodore E.	78
Dymond Electronics	79
East Texas Photocopy	88
Electronic Applications Co.	92
Electronic Mail Advertiser	89
Electrovoice, Inc.	Cover IV
Goodheart Co., Inc., R. E.	91
Gordon Co., Herbert W.	Cover III
H&L Associates	90
HAL Devices	84
Hallicrafters	77
Hammarlund Manufacturing Co.	5
Henry Radio	41
International Crystal Manufacturing Co.	1
James Research	90, 91
Jan Crystals	87
Joga, Productos	91
L. A. Amateur Radio	83
Lewispaul Electronics, Inc.	90
Liberty Electronics	94
Meshna, John, Jr.	95
Micro-Z Co.	87
Mosley Electronics, Inc.	96
National Radio	2
Nova Electronics	94
Omega-T Systems	90
Palomar Engineers	82
Poly Paks	92
R&R Electronics	92
RCA Institutes	23
Radio Amateur Callbook, Inc.	82, 85, 87
Radio Shop, Lab 1	88
Signal/One	75
Slep Electronics	94
Spectronics	58
Stellar Industries	84
Stinnette, Nat.	91
Structural Glass, Ltd.	87
Swan Electronics	73
Tapeco	85
Telrex Communication Engineering Laboratory	85
Unadilla Radiation Products	90
VHF Associates	89
VHF Communication	78
Vanguard Labs	86
Varitronics	69
Weinschenker, M.	89, 94
Westcom Engineering	57
Western Electronics	94
World QSL Bureau	89

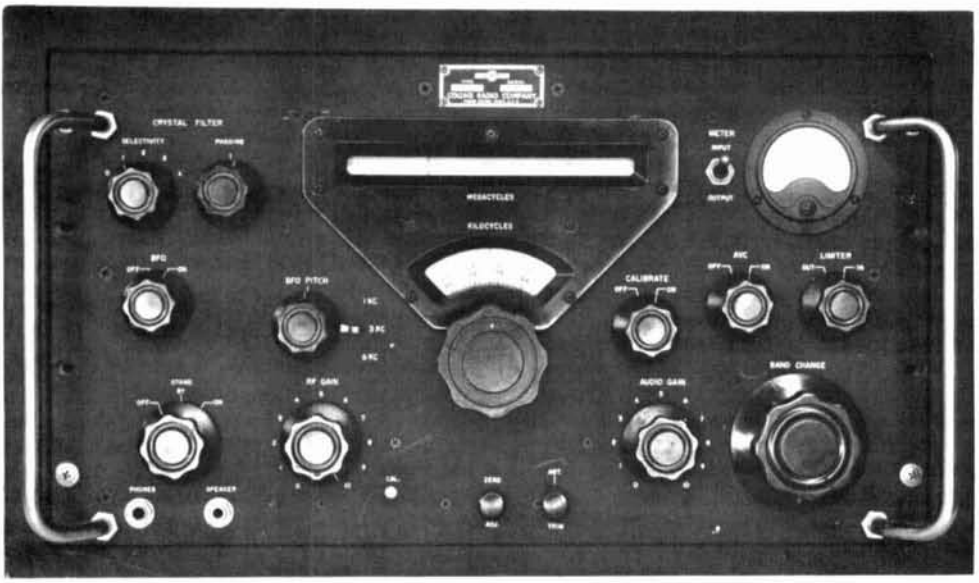

COLLINS 51J3/4 COMMUNICATION RECEIVERS

Over these many years we have specialized in fine quality communication receivers. We have probably sold as many as anyone else has and, therefore, probably have comprehensive knowledge of what the trade has to offer through different commercial models.

It is our carefully considered opinion, appraising all of the receivers made up through September and available commercially to the ham or short wave listener, that no set exists which embodies as much value as is contained in the 51 series Collins.

Although the 390 series is even more superb, the J series represents the best value.

Here is a receiver which you can pre-tune while the set is off to any discrete frequency within a range of 540 KHz to 30.5 MHz and then, when the set has been turned on, that frequency desired will be there within an accuracy of plus or minus 300 herz. The mechanical tuning arrangement providing as it does 1 MHz coverage divided into 1,000 parts each of $\frac{1}{8}$" is absolutely superb. You might think of this receiver as the ultimate for ham or short wave reception. As designed it provides for MCW, CW or AM reception. We can modify these sets and do frequently so that they receive side band as well, for an additional $55.00 to the base price. Sensitivity of the receiver as we ship them is better than 2 microvolts for 10 db signal to noise.

In the J4 model mechanical filters are employed which offer steep skirted selectivity of 1 KHz, 3 KHz and 6 KHz band pass. The receiver has $2\frac{1}{2}$ watts of audio output and over 4 or 500 ohm output impedance. Input of the set will accept either balanced or unbalanced coax or line levels from 50 ohms to 300 ohms resistive. A very effective noise limiter, an accurate calibrator, a darn good AVC system and an extremely stable BFO are also included. Then too, you have the extreme advantage of a genuine Lamb type crystal filter with ability to phase out unwanted signals. This receiver is essentially a triple conversion device with IF tunable and a crystal control front end. The "S" meter is alternately calibrated for up to 10 db of audio level by the flick of a switch.

Weighing but 35 lbs. the dimensions of the set are $10\frac{1}{2}$" high by 19" wide and $13\frac{7}{8}$" deep.

To those truly interested in a remarkable receiver having long life and exceptional value in today's market, we offer the 51J series at the following specific prices, FOB Harvard and individually packaged in wooden boxes for shipment via Railway Express. For the 51J2 $600.00; for the J3 $750.00; for the J4 $850.00 to $995.00 depending upon the serial number.

Product detectors for either of these can be added prior to shipment for $55.00 additional. Each of these receivers are individually gone over and restored to original electrical brilliance.

A full guarantee of six months is provided and naturally there is an instruction book.

HERBERT W. GORDON COMPANY

Harvard, Massachusetts 01451 • Telephone 617 — 456 — 3548

"Helping Hams to Help Themselves"

If the Electro-Voice Model 664 picks up sound here...

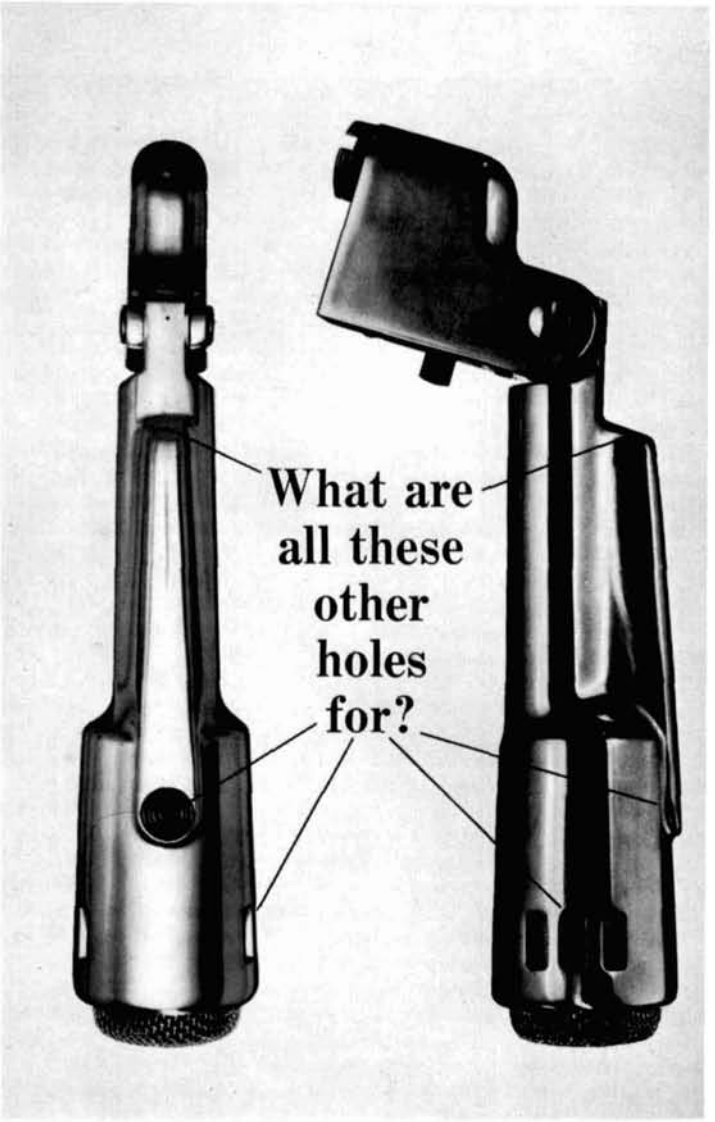

The holes in the top, sides and rear of the Electro-Voice Model 664 make it one of the finest dynamic cardioid microphones you can buy. These holes reduce sound pickup at the sides, and practically cancel sound arriving from the rear. Only an Electro-Voice Variable-D® microphone has them.

Behind the slots on each side is a tiny acoustic "window" that leads directly to the back of the 664 Acoustalloy® diaphragm. The route is short, small, and designed to let only highs get through. The path is so arranged that when highs from the back of the 664 arrive, they are cut in loudness by almost 20 db. Highs arriving from the front aren't affected. Why two "windows"? So that sound rejection is uniform and symmetrical regardless of microphone placement.

The hole on top is for the mid-range. It works the same, but with a longer path and added filters to affect only the mid-frequencies. And near the rear is another hole for the lows, with an even longer path and more filtering that delays only the bass sounds, again providing almost 20 db of cancellation of sounds arriving from the rear. This "three-way" system of ports insures that the cancellation of sound from the back is just as uniform as the pickup of sound from the front—without any loss of sensitivity. The result is uniform cardioid effectiveness at every frequency for outstanding noise and feedback control.

Most other cardioid-type microphones have a single cancellation port for all frequencies. At best, this is a compromise, and indeed, many of these "single-hole" cardioids are actually omnidirectional at one frequency or another!

In addition to high sensitivity to shock and wind noises, single-port cardioid microphones also suffer from proximity effect. As you get ultra-close, bass response rises. There's nothing you can do about this varying bass response—except use a Variable-D microphone with multi-port design* that eliminates this problem completely.

Because it works better, the E-V 664 Dynamic Cardioid is one of the most popular directional microphones for demanding communications applications. To learn more about Variable-D microphones, write for our free booklet, "The Directional Microphone Story." Then see and try the E-V 664 at your nearby Electro-Voice microphone headquarters. Just $89.00 in satin chrome or non-reflecting gray.

*Pat. No. 3,115,207

ELECTRO-VOICE, INC., Dept. 1192HC,
676 Cecil St., Buchanan, Mich. 49107

Electro-Voice
SETTING NEW STANDARDS IN SOUND